TM 750-136

DEPARTMENT OF THE ARMY TECHNICAL MANUAL

PROCEDURES FOR RAPID DEPLOYMENT, REDEPLOYMENT, AND RETROGRADE

SMALL ARMS

HEADQUARTERS, DEPARTMENT OF THE ARMY
MAY 1969

TECHNICAL MANUAL
No. 750-136

HEADQUARTERS
DEPARTMENT OF THE ARMY
WASHINGTON, D.C., *27 May 1969*

PROCEDURES FOR RAPID DEPLOYMENT, REDEPLOYMENT, AND RETROGRADE SMALL ARMS

	Paragraph	Page
CHAPTER 1. INTRODUCTION		
Purpose	1-1	1-1
Scope	1-2	1-1
Maintenance Forms and records	1-3	1-1
Special tools and equipment	1-4	1-1
Reporting of equipment publication improvements	1-5	1-1
2. PREPARATION INSTRUCTIONS FOR SHIPMENT: SURFACE VESSEL TRANSPORT		
General	2-1	2-1
Preparation instructions	2-2	2-1
3. PROCESSING TIME		3-1
4. LOADING DATA		4-1
APPENDIX A. PREPARATION INSTRUCTIONS FOR SHIPMENT: SURFACE VESSEL TRANSPORT		A-1

LIST OF TABLES

Number	Title	Page
1-1	Small Arms	1-1
3-1	Processing Time	3-1
4-1	Loading Data	4-1
A-1	Packaging Materials List	A-1-2
A-2-1	Packaging Materials List	A-2-3
A-2-2	Preservation for Basic Issue Items	A-2-4
A-3-1	Packaging Materials List	A-3-3
A-3-2	Preservation for Basic Issue Items	A-3-4
A-4	Packaging Materials List	A-4-3
A-5	Packaging Materials List	A-5-3
A-6	Packaging Materials List	A-6-3
A-7	Packaging Materials List	A-7-3
A-8	Packaging Materials List	A-8-3
A-9-1	Packaging Materials List	A-9-3
A-9-2	Preservation for Basic Issue Items	A-9-4
A-10	Packaging Materials List	A-10-2
A-11	Packaging Materials List	A-11-3
A-12	Packaging Materials List	A-12-3
A-13	Packaging Materials List	A-13-3
A-14	Packaging Materials List	A-14-3
A-15-1	Packaging Materials List	A-15-3
A-15-2	Preservation for Basic Issue Items	A-15-4
A-16	Packaging Materials List	A-16-3
A-17	Packaging Materials List	A-17-3
A-18-1	Packaging Materials List	A-18-3
A-18-2	Preservation for Basic Issue Items	A-18-4
A-19-1	Packaging Materials List	A-19-3
A-19-2	Preservation for Basic Issue Items	A-19-4
A-20-1	Packaging Materials List	A-20-3
A-20-2	Preservation for Basic Issue Items	A-20-4
A-21-1	Packaging Materials List	A-21-3
A-21-2	Preservation for Basic Issue Items	A-21-4
A-22-1	Packaging Materials List	A-22-3
A-22-2	Preservation for Basic Issue Items	A-22-4
A-23-1	Packaging Materials List	A-23-3
A-23-2	Preservation for Basic Issue Items	A-23-4
A-24	Packaging Materials List	A-24-2
A-25	Packaging Materials List	A-25-3
A-26-1	Packaging Materials List	A-26-3
A-26-2	Preservation for Basic Issue Items	A-26-4

*This manual supersedes TM 750-136, 5 September 1968, including all changes.

LIST OF TABLES—*Continued*

Number	Title	Page
A-27-1	Packaging Materials List	A-27-3
A-27-2	Preservation for Basic Issue Items	A-27-3
A-28-1	Packaging Materials List	A-28-3
A-28-2	Preservation for Basic Issue Items	A-28-4
A-29	Packaging Materials List	A-29-3
A-30	Packaging Materials List	A-30-3
A-31	Packaging Materials List	A-31-3
A-32	Packaging Materials List	A-32-3
A-33	Packaging Materials List	A-33-3
A-34	Packaging Materials List	A-34-3
A-35	Packaging Materials List	A-35-3
A-36	Packaging Materials List	A-36-3
A-37	Packaging Materials List	A-37-3
A-38-1	Packaging Materials List	A-38-3
A-38-2	Preservation for Basic Issue Items	A-38-4
A-39-1	Packaging Materials List	A-39-3
A-39-2	Preservation for Basic Issue Items	A-39-4
A-40	Packaging Materials List	A-40-2
A-41-1	Packaging Materials List	A-41-3
A-41-2	Preservation for Basic Issue Items	A-41-4
A-42-1	Packaging Materials List	A-42-3
A-42-2	Preservation for Basic Issue Items	A-42-3
A-43-1	Packaging Materials List	A-43-3
A-43-2	Preservation for Basic Issue Items	A-43-3
A-44	Packaging Materials List	A-44-3
A-45	Packaging Materials List	A-45-2
A-46	Packaging Materials List	A-46-2

LIST OF ILLUSTRATIONS

A-1 through A-24-1	Shipping Container	A-1-3—A-24-3
A-24-2	Shipping Pallet	A-24-4
A-25 through A-36	Shipping Container	A-25-3—A-36-4
A-37-1	Unit Container	A-37-4
A-37-2	Unit Container Blocking	A-37-5
A-37-3 through A-45	Shipping Container	A-37-6—A-45-3
A-46	Shipping Pallet	A-46-2

CHAPTER 1

INTRODUCTION

WARNING

CLEAR WEAPON before processing. Do not actuate toggles until weapon has been cleared. Inspect chamber to insure that it is empty and check to see that no ammunition is in position to be introduced. Avoid having live ammunition in vicinity of preservation area.

1–1. Purpose

This manual establishes the instructions for a rapid method of preparing small arms for deployment, redeployment, or retrograde. Certain conditions will necessitate removal of military equipment from one geographic area to another within a short time frame. In the event of these conditions, normal packaging and preservation methods will not apply. Alternate methods and preservation procedures contained in Appendix A will be followed to afford protection against corrosion and deterioration for maximum period of 180 days. Application of this manual is prohibited unless directed by theater commander major Army commander, and/or higher headquarters. Small Arms for which instructions do not appear in this manual will be preserved and packaged in accordance with the instructions herein for a like item.

1–2. Scope

This manual describes equipment, material, and packaging and preserving procedures for movement involving transportation by surface vessel transport for small arms items listed below (See Table 1–1).

1–3. Maintenance forms and records

Department of the Army forms and procedures used for equipment maintenance will be those prescribed by TM 38–750.

1–4. Special tools and equipment

For special tools and equipment referenced in this manual, see TM 750–210.

1–5. Reporting of equipment publication improvements

Reporting of errors, omissions, and recommendations for improving this publication by the individual user is encouraged. Reports should be submitted on DA Form 2028 (Recommended Changes to DA Publications) and forwarded directly to the Commanding General, U.S. Army Weapons Command, ATTN: AMSWE–REE–S, Rock Island, Ill. 61201.

Table 1–1. Small Arms

FSN	LIN	Item description	Appendix
1005–014–0369	B49546	Bayonet, M6, W/Scabbard	A–1
1005–017–9701	B49272	Bayonet, M7, W/Scabbard	A–1
1005–072–5011	R95251	Rifle, 7.62MM, M14A1 W/E	A–2
1005–073–9421	R94977	Rifle, 5.56MM, M16A1, W/E	A–3
1005–077–1658	L91016	Machine Gun, Caliber .50 ACT, M3	A–4
1005–214–0934	R91244	Revolver, Cal. .38, 2″ barrel, W/E	A–5
1005–317–2458	B49820	Bayonet M4, W/Scabbard	A–1
1005–317–2464	R91244	Revolver, Cal. .38, 4″ barrel, W/Holster	A–6
1005–317–2468	N96604	Pistol, Cal. .38, Model M, W/E	A–5
1005–317–2471	R94840	Rifle, Cal. .22, Winchester Model 75, W/E	A–7
1005–317–2474	N96193	Pistol, Automatic, Cal. .22, High Standard Supermatic	A–8
1005–322–9715	L91975	Machine Gun, Cal. .50, Browning M2, Heavy Barrel Flexible W/E	A–9
1005–322–9716	M75577	Mount, Tripod, Machine Gun Cal. .50, M3, W/E	A–10
1005–322–9718	M75440	MT, Tripod, Machine Gun Cal. .30 M2, W/E	A–11
1005–322–9736	R95936	Rifle, Cal. .30–06 Winchester, Model 70	A–12
1005–345–6124	N96878	Pistol, Cal. .45 M1911A1, NM, W/E	A–13
1005–561–2003	N96741	Pistol, Cal. .45, M1911A1, W/E	A–14
1005–589–1271	R95114	Rifle, 7.62MM, M14, W/E	A–15
1005–602–0898	N96193	Pistol, Cal. .22, High Standard	A–16
1005–602–2105	L91564	Machine Gun Cal. .50 Browning M2, HB TT (M45)	A–17
1005–605–7710	L92386	Machine Gun, 7.62MM: M60, W/E	A–18
1005–670–7670	D06435	Carbine, Cal. .30, M1 W/E	A–19

Table 1-1. Small Arms—Continued

FSN	LIN	Item description	Appendix
1005-670-7675	D06298	Carbine, Cal. .30, M2, W/E	A-19
1005-672-1643	L90742	Machine Gun, Cal. .30 Browning, M1919A4, Flexible W/E	A-20
1005-672-1649	L90742	Machine Gun Cal. .30, 1919A6, W/E	A-21
1005-672-1767	U56346	Submachine Gun, Cal. .45, M3, W/E	A-22
1005-672-1771	U56346	Submachine Gun, Cal. .45, M3A1, W/E	A-23
1005-673-3246	M74755	Mount, Machine Gun: A.A., Cal. .50, M63, W/E	A-24
1005-673-7955	N96741	Pistol, Cal. .45, M1911, W/E	A-25
1005-673-7965	N96741	Pistol, Cal. .45, M1911A1, W/E	A-14
1005-674-1309	R96073	Rifle, Cal. .30, Automatic, Browning M1918, A2, W/E	A-26
1005-674-1425	R95525	Rifle, Cal. .30, M1, W/E	A-27
1005-677-9130	T39223	Shotgun, 12 Gage, Riot Type, M520A, W/E	A-28
1005-677-9140	T39223	Shotgun, 12 Gage Riot Type, Stevens M620A, W/E	A-28
1005-677-9150	T39223	Shotgun, 12 Gage Riot Type, Winchester, M1912, W/E	A-28
1005-678-9828	R95388	Rifle, 7.62MM, M14 National Match, W/E	A-29
1005-679-6763	L92352	Machine Gun, 7.62MM: M73	A-30
1005-691-1288	R91244	Revolver, Cal. .38, 4" barrel W/Holster	A-6
1005-693-4854	L91427	Machine Gun, Cal. .50 Browning M2 HBTT	A-17
1005-694-4123	R94703	Rifle, Cal. .22, Remington Model 40X, H-1 (M12)	A-31
1005-710-5599	M75714	MT, Tripod, Machine Gun 7.62MM, M122	A-11
1005-711-6202	B68766	Bipod, Rifle M2	A-32
1005-713-9823	L92386	Machine Gun, 7.62MM, M60	A-33
1005-714-2393	L90879	Machine Gun, Cal. .30 Browning M1919A4 Flexible	A-34
1005-716-2946	L90879	Machine Gun, Cal. .30, M37	A-35
1005-726-5666	R91107	Revolver, Cal. .38, 2" barrel	A-36
1005-726-5687	R91244	Revolver, Cal. .38, 4" barrel	A-36
1005-726-5786	R91107	Revolver, Cal. .38, 2" barrel	A-36
1005-736-7841	N96330	Pistol, Cal. .22 Ruger, Mark I	A-16
1005-738-3026	N96878	Pistol, Cal. .45, M1911A1, W/E	A-13
1005-831-1267	N96193	Pistol, Cal. .22 Smith & Wesson M46	A-16
1005-840-3758	R94840	Rifle, Cal. .22, Remington, Model 513T, W/E	A-7
1005-840-7304	R91244	Revolver, Cal. .38, 4" barrel, W/Holster	A-6
1005-856-6885	R94967	Rifle, 5.56MM, M16, W/E	A-3
1005-869-8816	L92352	Machine Gun, 7.62MM, M73 Fixed W/O Suppressor	A-30
1005-903-0751	L92323	Machine Gun, 7.62MM, M134	A-37
1005-909-3002	L92260	Machine Gun, 7.62MM, M60D	A-33
1005-930-5595	A89819	Sub-Machine Gun, 5.56MM, CAR-15, W/E	A-38
1005-937-5839	R91315	Revolver, Cal. .38, 4" barrel	A-36
1005-937-5840	R91308	Revolver, Cal. .38, 2" barrel	A-36
1005-937-7323	L92352	Machine Gun, 7.62MM, M73A1	A-30
1005-937-8777	Not assigned	Rifle, 7.62MM, M14, W/Telescope M84 and Mount W/E	A-39
1005-952-4063	T39223	Shotgun, 12 Gage, Riot Type, Stevens, Model 77E, W/E	A-40
1010-691-1382	L44575	Launcher, Grenade, 40MM, M79, W/E	A-41
1010-912-3014	L44580	Launcher, Grenade, 40MM, XM148	A-42
1055-575-0064	L45260	Launcher, Rocket, 3.5, M20, W/E	A-43
1055-591-0217	L45260	Launcher, Rocket, 3.5, M20B1, W/E	A-43
1055-840-1841	L45260	Launcher, Rocket, 3.5, M20A1, W/E	A-43
1055-840-1842	L45260	Launcher, Rocket, 3.5, M20A1B1, W/E	A-43
1095-726-5657	N97152	Pistol, Pyrotechnic, AN-M8, W/Mount	A-44
1095-726-5820	N97015	Pistol, Pyrotechnic, AN-M8	A-45
1095-897-8755	Q12722	Rack Storage, Small Arms	A-46

CHAPTER 2

PREPARATION INSTRUCTIONS FOR SHIPMENT: SURFACE VESSEL TRANSPORT

2-1. General

a. This chapter provides instructions for preservation, packaging, packing and deprocessing as it applies to rapid deployment, redeployment, and retrograde.

b. The instructions herein apply to packaging in a limited sense since the packaging will sustain serviceability of the item for a maximum of 180 days. The instructions include:

(1) Cleaning and drying.

(2) Preservative application which is the use of protective measures to prevent deterioration resulting from exposure to atmospheric conditions during shipment and storage.

(3) Packaging which includes the use and marking of wrapping materials and interior containers.

(4) Packing which includes the use of exterior shipping containers, assembling items or packages of items therein and marking of shipping containers.

2-2. Preparation instructions

a. General. Each item will be processed in accordance with the step-by-step procedure outlined in the applicable preparation instructions. The applicable preparation instructions, together with the associated packaging material lists for a specific item, are indicated by the appendix number in table 1-1. **Local reproduction of Appendix A (checklist) and/or B, where applicable, is authorized.**

b. List of Materials. A list of the necessary preservation, packaging, and packing material required to process items is included in a table following each end item processing procedure.

c. Preparation for Quarantine Inspection.

(1) All equipment, and/or containers, will be completely free of soil when loaded on ships.

(2) All containers, such as CONEX, sea vans, and other containers, will be cleared of all spilled grain, food stuff, or soil before being loaded with retrograde cargo or returned empty to CONUS.

(3) Wood containers and packing material will be inspected for termite, wood borer, or other insect infestation before being packed in larger containers, or loaded on ships. Under no consideration will infested wood or packing material be used.

(4) All containers and packing material will be inspected immediately prior to packing to assure the absence of rodents, snakes, snails, other animals, or insects.

(5) Only authorized packing material will be used. In no instance will native grasses or fibers be used. All packing material will be stored to prevent infestation by insects or rodents.

(6) All open containers more than 10 cubic feet that will be shipped separately will be treated as follows:

(*a*) Diazinon dust 2 percent, 6840-753-5038, unit of issue 25-pound pail, will be applied to the interior of each container, at the rate of 4 pounds per 1,000 square feet; precautions should be taken not to exceed this amount. The insecticide should be evenly applied to the floor and the surface of the containers. Application directed toward the walls and upper corners will help reduce the possibility of quarantinable pest insects being transported. Dust can be applied with either duster, manually operated, rotary fan, 3740-132-5935, or duster, manually operated, tubular pump, 3740-132-5936. The latter is more satisfactory for smaller boxes.

(*b*) Rodenticide, bait block diphacinona-paraffin, 8 ounce, 6840-089-4664, unit of issue 20-pound box, will be used in containers.

1. One block will be placed near the center of each CONEX or applicable smaller container. The red tape attached to the block will be led to the outside of the container in such a manner as to be clearly visible when the container is closed.

2. In large container, van, etc., one block will be used for each 5 linear feet, evenly spaced throughout the length of the container. The block nearest the opening will have its red tape led to the outside so as to be clearly visible.

NOTE

In the event vans or larger containers are loaded with CONEX or smaller containers that have already been treated, 3 bait blocks will be used, evenly spaced throughout the length of the container. The block nearest the door to have its red tape led to the outside so as to be clearly visible.

(7) All closed containers more than 10 cubic feet that will be shipped separately will be treated as follows:

(*a*) Insecticide dichlorvos strips, 6840-142-9438, 2 inch, unit of issue 144 per case, will be

attached to the interior of each closed container at the rate of 5 linear inches of strips, per CONEX. Equal or lesser amounts should be used for smaller containers. Strips should be attached to the ceiling of CONEXES and to areas offering the greatest amount of open space in other containers.

NOTE

First procurement will be 2-inch strips which should be used at the rate of 3 per CONEX.

(*b*) Instructions on use of rodenticide, bait block in closed containers will have areas treated as shown in paragraph (6)(*b*).

(8) Large items of equipment such as tanks, trucks, aircraft, etc., will have inclosed areas treated as in (7) above.

(9) Supplies and equipment listed should be available in the Command.

(10) In the event these instructions are at variance with the Command regulations regarding shipment of retrograde cargo, the Command entomologist should be consulted. Technical assistance and advice regarding these instructions should be obtained from the Command entomologist.

(11) Personnel involved in applying the dust, strips, and bait blocks will wear gloves, protective clothing, and respirators as recommended by the Post Surgeon or Safety Officer.

d. Depreservation of Material.

(1) Collection and disposal of insecticides and rodenticides during unpacking operations.

(*a*) All containers which have a red tape extending from the container opening have been treated with 2 percent diazinon dust or dichlorvos strip insecticide and contain one or more blocks of rodenticide, diphacinona-paraffin, with a red tape attached. Removal of this material is necessary before individual items are unpacked or equipment is processed.

(*b*) The following procedures will be followed for removal of dust and bait blocks.

1. On opening the container treated with diazinon dust and rodenticide, a vacuum cleaner will be used to collect the diazinon dust as the individual items or packages are removed from the containers. The dust should be removed from each package.

2. After all of the contents have been removed and cleaned, the inner surfaces of the container will be vacuumed to remove all remaining dust.

3. Rodenticide bait blocks will be removed during the unpacking operation.

4. All dust and bait blocks will be stored in separate closed containers for collection by the Post Engineer for proper disposal.

5. Personnel involved in removing the dust and bait blocks will wear gloves, protective clothing, and respirators as recommended by the Post Surgeon or Safety Officer.

(*c*) The following procedure will be followed for removal of dichlorvos strips and bait blocks.

1. Dichlorvos strips and bait blocks will be removed during the unpacking operation.

2. All strips and bait blocks will be stored in separate containers for collection by the Post Engineer for proper disposal.

3. Personnel in removing the strips and bait blocks will wear gloves, protective clothing, and respirators as recommended by the Post Surgeon or Safety Officer.

(2) The Post Engineer or Surgeon should be notified immediately of living or dead insects, rodents or other animals that are found during unpacking operations.

CHAPTER 3

PROCESSING TIME

The man-hour requirements shown in table 3–1 are based on an average for the equipment covered in table 1–1. The use of table 3–1 will help to establish the total time and manpower requirements for processing these items of equipment.

Table 3–1. Processing Time

FSN	Item description	Man-hours
1005–014–0369	Bayonet, M6, W/Scabbard	¼
1005–017–9701	Bayonet, M7, W/Scabbard	¼
1005–072–5011	Rifle, 7.62MM, M14A1, W/E	1
1005–073–9421	Rifle, 5.56MM, M16A1, W/E	1
1005–077–1658	Machine Gun, Cal. .50, ACT M3	1
1005–214–0934	Revolver, Cal. .38, 2″ barrel, W/E	½
1005–317–2458	Bayonet M4, W/Scabbard	¼
1005–317–2464	Revolver, Cal. .38, 4″ barrel, W/Holster	½
1005–317–2468	Pistol, Cal. .38, Model M, W/E	½
1005–317–2471	Rifle, Cal. .22, Winchester Model 75, W/E	1
1005–317–2474	Pistol, Automatic, Cal. .22, High Standard Supermatic	½
1005–322–9715	Machine Gun, Cal. .50. Browning M2, Heavy Barrel, Flexible W/E	1
1005–322–9716	Mount, Tripod Machine Gun, Cal. .50, M3, W/E	1
1005–322–9718	MT, Tripod, Machine Gun, Cal. .30 M2, W/E	1
1005–322–9736	Rifle, Cal. .30–06 Winchester, Model 70	1
1005–345–6124	Pistol, Cal. .45, M1911A1 NM, W/E	½
1005–561–2003	Pistol, Cal. .45, M1911A1, W/E	½
1005–589–1271	Rifle, 7.62MM, M14 W/E	1
1005–602–0898	Pistol, Cal. .22 High Standard	½
1005–602–2105	Machine Gun, Cal. .50 Browning M2, HB TT (M45)	1
1005–605–7710	Machine Gun, 7.62MM: M60, W/E	1
1005–670–7670	Carbine, Cal. .30, M1, W/E	1
1005–670–7675	Carbine, Cal. .30, M2, W/E	1
1005–672–1643	Machine Gun, Cal. .30 Browning M1919A4, Flexible W/E	1
1005–672–1649	Machine Gun, Cal. .30, 1919A6, W/E	1
1005–672–1767	Sub-Machine Gun, Cal. .45, M3, W/E	1
1005–672–1771	Sub-Machine Gun, Cal. .45, M3A1, W/E	1
1005–673–3246	Mount, Machine Gun: A.A., Cal. .50, M63, W/E	1
1005–673–7955	Pistol, Cal. .45, M1911, W/E	½
1005–673–7965	Pistol, Cal. .45, M1911A1, W/E	½
1005–674–1309	Rifle, Cal. .30, Automatic, Browning M1918, A2, W/E	1
1005–674–1425	Rifle, Cal. .30, M1, W/E	1
1005–677–9130	Shotgun, 12 Gage, Riot Type, M520A, W/E	1
1005–677–9140	Shotgun, 12 Gage, Riot Type, Stevens M620A, W/E	1
1005–677–9150	Shotgun, 12 Gage, Riot Type, Winchester M1912 W/E	1
1005–678–9828	Rifle, 7.62MM, M14 National Match, W/E	1
1005–679–6763	Machine Gun, 7.62MM: M73	1
1005–691–1288	Revolver, Cal. .38, 4″ barrel W/Holster	½
1005–693–4854	Machine Gun, Cal. .50 Browning, M2 HBTT	1
1005–694–4123	Rifle, Cal. .22, Remington Model 40X, H–1 (M12)	1
1005–710–5599	MT, Tripod, Machine Gun 7.62MM, M122	1
1005–711–6202	Bipod, Rifle M2	½
1005–713–9823	Machine Gun, 7.62MM, M60	1
1005–714–2393	Machine Gun, Cal. .30 Browning M1919, A4, Flexible	1
1005–716–2946	Machine Gun, Cal. .30, M37	1
1005–726–5666	Revolver, Cal. .38, 2″ barrel	½
1005–726–5687	Revolver, Cal. .38, 4″ barrel	½
1005–726–5786	Revolver, Cal. .38, 2″ barrel	½
1005–736–7841	Pistol, Cal. .22 Ruger, Mark I	½
1005–738–3026	Pistol, Cal. .45, M1911A1, W/E	½
1005–831–1267	Pistol, Cal. .22 Smith & Wesson M46	½
1005–840–3758	Rifle, Cal. .22, Remington, Model 513T, W/E	1
1005–840–7304	Revolver, Cal. .38, 4″ barrel W/Holster	1

Table 3-1. Processing Time—Continued

FSN	Item description	Man-hours
1005-856-6885	Rifle, 5.56MM, M16, W/E	1
1005-869-8816	Machine Gun, 7.62MM, M73 Fixed W/O Suppressor	1
1005-903-0751	Machine Gun, 7.62MM, M134	1
1005-909-3002	Machine Gun, 7.62MM, M60D	1
1005-930-5595	Sub-Machine Gun, 5.56MM, CAR-15, W/E	1
1005-937-5839	Revolver, Cal. .38, 4″ barrel	½
1005-937-5840	Revolver, Cal. .38, 2″ barrel	½
1005-937-7323	Machine Gun, 7.62MM, M73A1	1
1005-937-8777	Rifle, 7.62MM, M14, W/Telescope M84, and Mount W/E	1
1005-952-4063	Shotgun, 12 Gage, Riot Type, Stevens Model 77E, W/E	1
1010-691-1382	Launcher, Grenade, 40MM, M79, W/E	1
1010-912-3014	Launcher, Grenade, 40MM, XM148	1
1055-575-0064	Launcher, Rocket 3.5, M20, W/E	1
1055-591-0217	Launcher, Rocket 3.5, M20B1, W/E	1
1055-840-1841	Launcher, Rocket 3.5, M20A1, W/E	1
1055-840-1842	Launcher, Rocket 3.5, M20A1B1, W/E	1
1095-726-5657	Pistol, Pyrotechnic AN-M8, W/Mount	½
1095-726-5820	Pistol, Pyrotechnic, AN-M8	½
1095-897-8755	Rack Storage, Small Arms	1

CHAPTER 4

LOADING DATA

Table 4–1 contains loading data, i.e., weight and cargo volume to be used by the transport planner to determine surface vessel space requirements.

Table 4–1. Loading Data

FSN	Shipping unit	Weight (lbs	Cubic ft	Length (in.)	Width (in.)	Height (in.)
1005–014–0369	Bayonet, M6, W/Scabbard	1, 000. 00	37. 000	57¼	47¾	25⅞
1005–017–9701	Bayonet, M7, W/Scabbard	1, 000. 00	37. 000	57¼	47¾	25⅞
1005–072–5011	Rifle, 7.62MM, M14A1, W/E	842. 00	49. 260	49	45½	40⅛
1005–073–9421	Rifle, 5.56MM, M16A1, W/E	496. 00	51. 079	59	42½	35⅛
1005–077–1658	Machine Gun Caliber .50, ACT M3	770. 00	30. 000	63½	27¼	31⅞
1005–214–0934	Revolver, Cal. .38, 2″ barrel, W/E	234. 00	16. 580	36¼	27¾	28½
1005–317–2458	Bayonet, M4, W/Scabbard	1, 000. 00	37. 000	57¼	47¾	25⅞
1005–317–2464	Revolver, Cal. .38, 4″ barrel, W/Holster	315. 00	24. 660	37¾	34¼	32½
1005–317–2468	Pistol, Cal. .38, Model M, W/E	234. 00	16. 580	36¼	27¾	28½
1005–317–2471	Rifle, Cal. .22 Winchester Model 75, W/E	946. 00	58. 520	50	45½	45⅝
1005–317–2474	Pistol, Automatic, Cal. .22, High Standard Supermatic	507. 00	18. 940	39	31¼	25⅝
1005–322–9715	Machine Gun, Cal. .50, Browning M2, Heavy barrel Flexible, W/E	1, 208. 00	37. 000	60¾	30½	36⅜
1005–322–9716	Mount, Tripod, Machine Gun, Cal. .50, M3, W/E	1, 000. 00	37. 987	51¼	34½	35⅛
1005–322–9718	Mount, Tripod, Machine Gun, Cal. .30, M2, W/E	677. 00	34. 062	49½	33½	35⅛
1005–322–9736	Rifle, Cal. .30–06 Winchester, Model 70	1, 000. 00	54. 470	51	41½	45⅛
1005–345–6124	Pistol, Cal. .45, M1911A1, National Match, W/E	435. 00	16. 580	36¼	27¾	28⅞
1005–561–2003	Pistol, Cal. .45, M1911A1, W/E	406. 00	16. 580	36¼	27¾	28½
1005–589–1271	Rifle, 7.62MM, M14, W/E	732. 00	49. 260	49	45½	35⅛
1005–602–0898	Pistol, Cal. .22 High, Standard	545. 00	18. 070	39	31¼	25⅝
1005–602–2105	Machine Gun, Cal. .50, Browning M2, HB TT (M45)	868. 00	31. 000	50¾	31¾	35⅜
1005–605–7710	Machine Gun, 7.62MM, M60, W/E	725. 00	46. 271	50½	41	39⅛
1005–670–7670	Carbine, Cal. .30, M1, W/E	886. 00	57. 662	53	45½	42⅛
1005–670–7675	Carbine, Cal. .30, M2, W/E	886. 00	57. 662	53	45½	42⅛
1005–672–1643	Machine Gun, Cal. .30, Browning M1919A4, Flexible W/E	1, 170. 00	46. 231	53	39¾	37⅞
1005–672–1649	Machine Gun, Cal. .30, 1919A6, W/E	1, 195. 00	43. 263	49⅝	39⅜	37⅞
1005–672–1767	Submachine Gun, Cal. .45, M3, W/E	361. 00	12. 670	32¾	28	23⅞
1005–672–1771	Submachine Gun, Cal. .45, M3A1, W/E	385. 00	12. 670	32¾	28	23⅞
1005–673–3246	Mount, Machine Gun: A.A., Cal. .50, M63, W/E	1, 000. 00	40. 055	47	36¼	39
1005–673–7955	Pistol, Cal. .45, M1911, W/E	385. 00	16. 580	36¼	27¾	28½
1005–673–7965	Pistol, Cal. .45, M1911A1, W/E	406. 00	16. 580	36¼	27¾	28½
1005–674–1309	Rifle, Cal. .30, Automatic Browning, M1918, A2, W/E	940. 00	44. 337	52	44½	33⅛
1005–674–1425	Rifle, Cal. .30, M1, W/E	990. 00	49. 579	49½	46	37⅝
1005–677–9130	Shotgun, 12 Gage, Riot Type, M520A, W/E	954. 00	70. 635	53	45½	47⅛
1005–677–9140	Shotgun, 12 Gage, Riot Type, Stevens M620A, W/E	954. 00	70. 635	53	45½	47⅛
1005–677–9150	Shotgun, 12 Gage, Riot Type, Winchester M1912, W/E	954. 00	70. 635	53	45½	47⅛
1005–678–9828	Rifle, 7.62MM, M14 National Match, W/E	706. 00	49. 260	49	45½	35⅛
1005–679–6763	Machine Gun, 7.62MM, M73	830. 00	28. 519	39¾	34¼	35⅛
1005–691–1288	Revolver, Cal. .38, 4″ barrel W/Holster	315. 00	24. 660	37¾	34¼	32½
1005–693–4854	Machine Gun, Cal. .50, Browning M2 HB TT	868. 00	31. 000	50¾	31¾	35⅜
1005–694–4123	Rifle, Cal. .22, Remington Model 40X, H–1 (M12)	1, 000. 00	58. 699	55	41½	45⅛
1005–710–5599	MT, Tripod, Machine Gun, 7.62MM, M122	712. 00	34. 062	49½	33½	35⅛
1005–711–6202	Bipod, Rifle M2	990. 00	50. 455	48⅛	40⅝	44¼
1005–713–9823	Machine Gun, 7.62MM, M60	642. 00	41. 728	48½	38	39⅛
1005–714–2393	Machine Gun, Cal. .30 Browning M1919A4, Flexible	990. 00	46. 231	53	46	37⅞
1005–716–2946	Machine Gun, Cal. .30, M37	981. 00	43. 589	46½	40¾	41⅞
1005–726–5666	Revolver, Cal. .38, 2″ Barrel	495. 00	18. 730	39	29¼	28⅜
1005–726–5687	Revolver, Cal. .38, 4″ Barrel	566. 00	18. 730	39	29¼	28⅜
1005–726–5786	Revolver, Cal. .38, 2″ Barrel	495. 00	18. 730	39	29¼	28⅜
1005–736–7841	Pistol, Cal. .22, Ruger, Mark I	545. 00	18. 070	39	31¼	25⅝
1005–738–3026	Pistol, Cal. .45, M1911A1, W/E	435. 00	16. 580	36¼	27¾	28⅞
1005–831–1267	Pistol, Cal. .22, Smith & Wesson, M46	545. 00	18. 070	39	31¼	25⅝
1005–840–3758	Rifle, Cal. .22, Remington, Model 513T, W/E	906. 00	58. 520	50	45½	45⅝

Table 4-1. Loading Data—Continued

FSN	Shipping unit	Weight (lbs)	Cubic ft	Length (in.)	Width (in.)	Height (in.)
1005-840-7304	Revolver, Cal. .38, 4″ Barrel, W/Holster	315. 00	24. 660	37¾	34¼	32½
1005-856-6885	Rifle, 5.56MM, M16, W/E	496. 00	51. 079	59	42½	35⅛
1005-869-8816	Machine Gun, 7.62MM, M73 Fixed W/O Suppressor	750. 00	28. 519	39¾	34¼	35⅛
1005-903-0751	Machine Gun, 7.62MM, M134	457. 00	27. 620	39⅜	37¾	32⅛
1005-909-3002	Machine Gun, 7.62MM, M60D	617. 00	41. 728	48½	38	39⅛
1005-930-5595	Sub-Machine Gun, 5.56MM, CAR-15, W/E	386. 00	19. 443	33¼	30¾	32⅞
1005-937-5839	Revolver, Cal. .38, 4″ Barrel	566. 00	18. 730	39	29¼	28⅜
1005-937-5840	Revolver, Cal. .38, 2″ Barrel	495. 00	18. 730	39	29¼	28⅜
1005-937-7323	Machine Gun, 7.62MM, M73A1	800. 00	28. 519	39¾	34¼	35⅛
1005-937-8777	Rifle, 7.62MM, M14, W/Telescope M84 and Mount W/E	822. 00	49. 260	49	45½	35⅛
1005-952-4063	Shotgun, 12 Gage, Riot Type Stevens, Model 77E, W/E	954. 00	55. 078	47	43½	45⅛
1010-691-1382	Launcher, Grenade, 40MM, M79, W/E	958. 00	40. 800	53	45½	37⅛
1010-912-3014	Launcher, Grenade, 40MM, XM148	330. 00	15. 000	36¼	28¾	24⅞
1055-575-0064	Launcher, Rocket 3.5, M20, W/E	450. 00	45. 000	57	34¾	40⅜
1055-591-0217	Launcher, Rocket 3.5, M20B1, W/E	450. 00	45. 000	57	34¾	40⅜
1055-840-1841	Launcher, Rocket 3.5, M20A1, W/E	450. 00	45. 000	57	34¾	40⅜
1055-840-1842	Launcher, Rocket 3.5, M20A1B1, W/E	450. 00	45. 000	57	34¾	40⅜
1095-726-5657	Pistol, Pyrotechnic, AN-M8, W/Mount	373. 00	19. 070	31¾	31¾	30⅛
1095-726-5820	Pistol, Pyrotechnic, AN-M8	293. 00	19. 070	34¾	31¾	29⅞
1095-897-8755	Rack Storage, Small Arms	380. 00	90. 000	69	48	45

APPENDIX A

PREPARATION INSTRUCTIONS FOR SHIPMENT: SURFACE VESSEL TRANSPORT

Each end item will be processed in accordance with the step-by-step procedure outlined in the applicable preparation instructions (apps. A–1 through A–46).

APPENDIX A–1

PREPARATION INSTRUCTIONS FOR SHIPMENT: SURFACE VESSEL TRANSPORT

	FSN	ITEM DESCRIPTION
☐	1005–014–0369	Bayonet M6 W/Scabbard.
☐	1005–017–9701	Bayonet M7 W/Scabbard.
☐	1005–317–2458	Bayonet M4 W/Scabbard.

PRESERVED: _____ (Month) _____ (Day) _____ (Year)

PRESERVED FOR A MAXIMUM OF 180 DAYS

NOTE:

Function: Relates to instructions to be accomplished in preparation of the equipment for shipment.

Mech: For initials of mechanic or responsible processing personnel to indicate function has been completed.

Insp: For initials of inspector certifying that function has been completed as indicated by the mechanic or processing personnel.

Step	Function	Mech	Insp
	a. Unit Responsibility.		
1	Assure that bayonets and scabbards are in good condition.		
2	Deliver bayonets and scabbards to designated processing area.		
3	Unit Commander or representative will remain with equipment until acceptance by responsible preservation site personnel.		
	b. Cleaning, Preservation, Packaging, Packing, and Marking.		
1	Disassemble scabbard and bayonet as necessary to accomplish desired cleaning.		
2	Clean all metallic surfaces by wiping with rag (DDD–R–30) (7920–205–3570) saturated with dry-cleaning solvent (P–D–680) (6850–285–8012).		
3	Drain and dry with compressed air or wiping rag (DDD–R–30) (7920–205–3570).		
4	Fabricate a fiberboard box, (PPP–F–320) (8135–132–9067), 22″ x 13″ x 11″.		
5	Cushioning material shall be located in bottom of container (PPP–C–843) (8135–855–6969) 13″ x 22″.		
6	Locate paper, volatile packaging (MIL–P–3420) (8135–985–7242) 13″ x 22″ on top of cushioning.		
7	Place ten (10) bayonets with scabbards on layer of VCI alternating the bayonet handles end to end.		
8	Repeat the above operation for fifty (50) bayonets with scabbards.		
9	Material needed for 50 bayonets, 6 pieces of cushioning (PPP–C–843) (8135–855–6969), size 13″ x 22″ and 5 pieces of (MIL–P–3420) (8135–985–7242), 13″ x 22″, distributed as outlined in steps 5, 6 and 7.		
10	Close and seal all seams and manufacturer's joints of fiberboard box with pressure sensitive tape (PPP–T–60) (8135–890–9873) 2″ x 131″.		
11	Apply the following information on each fiberboard container with stencil ink (TT–I–559) (7510–161–0811): Federal stock number Item description 50 Each Preserved on (month-day-year) for a maximum of 180 days Gross Weight 55 Cube 2		

Step	Function	Mech	Insp
12	Assemble exterior shipping container 54¼″ x 46¼″ x 22¾″ (See Figure A–1) with 8D nails (FF–N–105) (5315–010–6507) and apply skids with 10D nails (FF–N–105) (5315–010–6509).		
13	Pack (16) cartons containing (50) bayonet and scabbards into a cleated plywood box.		
14	Close container as specified with 8D nails (FF–N–105) (5315–010–6507).		
15	Apply three (3) steel strapping bands (QQ–S–781) (8135–283–0669), ¾″ x 154″ (3 required).		
16	Lock strapping with three (3) seals (8135–239–5293).		
17	Apply the following marking in 1″ letters on cleated plywood box with stencil ink (TT–I–559) (7510–161–0811): Federal Stock Number Item Description Quantity Preserved on (month-day-year) for a maximum of 180 days Gross Weight 1,000 lbs Cube 37		
18	Preparation instructions sheets shall be completed and placed in a waterproof envelope (MIL–B–131) (8135–282–0565), 10″ x 12″ and secured to the item/container in a conspicuous location.		
	c. Deprocessing. Prior to placing this item in service, following receipt, deprocessing action will be in reverse of check list above.		

Table A–1. Packaging Materials List

FSN	Item description	Unit of use qty
**5315–010–6507	Nail, General Purpose (FF–N–105) 8D 2⅜″ long, 50 pounds per carton	1 lb.
**5315–010–6509	Nail, General Purpose (FF–N–105) 10D 2⅞″ long, 50 pounds per carton	½ lb.
**5510–220–6078	Lumber, Soft Wood, (MM–L–751), 1″ x 4″	7½ bf.
**5510–220–6194	Lumber, Soft Wood, (MM–L–751), 2″ x 4″	8 bf.
**5530–554–8709	Plywood, Soft Wood, (NN–P–530) ¾″ x 48″ x 96″ sheet	71 sf.
6850–285–8012	Solvent, Dry Cleaning (P–D–680) 55 gallon drum	½ oz.
7510–161–0811	Ink, Marking, Stencil, Black (TT–I–559) 1 gallon can	⅛ oz.
7920–205–3570	Rag, Wiping (DDD–R–30), 50 pound bale	(***).
*8135–132–9067	Fiberboard, Corrugated (PPP–F–320), 48″ x 96″ sheet	(***).
**8135–239–5293	Seal, Strapping, Closed Type W/O Ears, ¾″ x 1.7812 x 0.8075 wide 5000 per box	3 ea.
**8135–282–0565	Barrier Material, Water-proofed Flexible, (MIL–B–131) 36″ x 200 yard roll	⅓ yd.
**8135–283–0669	Strapping, Steel, Nailless (QQ–S–781) ¾″ x 0.023″ 100 pound coil	38½ ft.
*8135–855–6969	Cushioning Material, Cellulosic (PPP–C–843), ¾″ x 24″ x 167 foot package	1 ft.
*8135–890–9873	Pressure Sensitive Tape, (PPP–T–60) 2″ x 60 yard roll	3¾ yd.
*8135–985–7242	Paper, Volatile, Packaging (MIL–P–3420), 36″ x 100 foot roll	3⅓ ft.
9310–160–7858	Board, Stencil, UU–S–625, 100 sh	(***).

*Material requirements for 50 bayonets w/scabbards.
**Material requirements for 800 bayonets with scabbards.
***These items will be required in addition to the packaging materials listed above and will be used as needed.

Bill of Materials

Name	No. req'd	Material	Dimensions	FSN
Horizontal Cleats	4	Wood	1″ x 4″ x 22¾″	5510-220-6078
Verticle Cleats	4	Wood	1″ x 4″ x 38¾″	5510-220-6078
Ends	2	Plywood	46¼″ x 22¾″ x ¾″	5530-554-8709
Sides	2	Plywood	57¼″ x 22¾″ x ¾″	5530-554-8709
Top	1	Plywood	57¼″ x 47¾″ x ¾″	5530-554-8709
Bottom	1	Plywood	57¼″ x 47¾″ x ¾″	5530-554-8709
Skids	3	Wood	2″ x 4″ x 47¾″	5510-220-6194

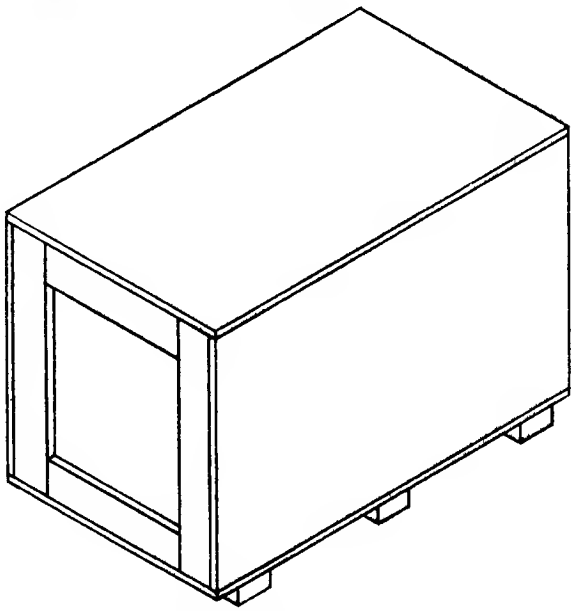

Figure A-1. Shipping container.

APPENDIX A–2

PREPARATION INSTRUCTIONS FOR SHIPMENT: SURFACE VESSEL TRANSPORT

FSN	ITEM DESCRIPTION
☐ 1005–072–5011	Rifle, 7.62 Millimeter, M14A1, W/E.

PRESERVED: _____ _____ _____
(Month) (Day) (Year)

PRESERVED FOR A MAXIMUM OF 180 DAYS

NOTE:

Function: Relates to instructions to be accomplished in preparation of the equipment for shipment.

Mech: For initials of mechanic or responsible processing personnel to indicate function has been completed.

Insp: For initials of inspector certifying that function has been completed as indicated by the mechanic or processing personnel.

Step	Function	Mech	Insp
	a. Unit Responsibility.		
1	Assure that weapon is in operating condition prior to movement to processing site.		
2	Certify that weapon, magazines and containers are free of ammunition.		
3	Deliver weapon, complete with tools and equipment, to designated processing site.		
4	Unit commander or representative will remain with weapons until acceptance by responsible preservation site personnel.		
	b. Cleaning, Preservation, Packaging, Packing, and Marking.		
	WARNING		
	Before cleaning and packaging, be sure weapon is clear. Do not actuate trigger until weapon has been cleared. Inspect chamber to insure that it is empty and check to see that no ammunition is in position to be introduced. Avoid having live ammunition in vicinity of work area.		
1	Remove stabilizer, magazine and bipod.		
2	Disassemble weapon, as necessary in preparation for thorough cleaning.		
3	Clean exterior surfaces of metal parts with a clean rag, (DDD–R–30) (7920–205–3570) saturated with solvent cleaning compound (MIL–C–372) (6850–753–4806).		
4	Clean barrel bore, chamber and heavy contaminants of exterior surfaces with a snug fitting bristle brushes (1005–556–4174) and (1005–690–8441), saturated with solvent cleaning compound, (MIL–C–372) (6850–753–4806). Use rod furnished as "special tools".		
5	Further cleaning of metal part shall be accomplished by complete immersion in dry-cleaning solvent, (P–D–680) (6850–285–8012), accompanied by scrubbing and agitating or with a solvent-saturated rag, (DDD–R–30) (7920–205–3570).		
6	Rinse parts with clean dry-cleaning solvent, (P–D–680) (6850–285–8012).		
7	Drain and dry clean parts with dry compressed air or with wiping rags, (DDD–R–30) (7920–205–3570). The barrel bore and chamber shall be dried with cleaning swabs (1005–288–3565). All cleaned surfaces shall be dried prior to preservative application.		
8	Cleaning of canvas, webbing, synthetic materials, and wood shall be by any process or combination of processes which will accomplish thorough cleaning without damage to the item(s) (brushing, wiping, etc.).		

Step	Function	Mech	Insp
9	Apply general purpose lubricating oil, (VV–L–800) 9150–281–2007, to all metallic surfaces by any applicable procedure. Excess oil shall be drained prior to packaging.		
10	Insert a VCI treated bore tube, (1005–336–0225), into bore of barrel bending protruding portion over the muzzle end.		
11	Fold sling and wrap with a piece of volatile paper (MIL–P–3420) (8135–985–7242), 8″ x 12″.		
12	Wrap weapon with a piece of volatile paper (MIL–P–3420) (8135–985–7242), 18″ x 48″.		
13	Insert weapon and sling, minus stabilizer and bipod, into a barrier bag (MIL–B–131) (8135–282–0565), 12″ x 50″.		
14	Close bag by heat sealing.		
15	Wrap stabilizer and bipod in volatile paper (MIL–P–3420) (8135–985–7242), 18″ x x 36″.		
16	Overwrap stabilizer and bipod in cushioning material (PPP–C–843) (8135–855–6969), 18″ x 36″ (3 pieces required).		
17	Secure cushioning material with pressure sensitive tape (PPP–T–60) (8135–890–9873), 2″ x 6″ (4 pieces required).		
18	Insert cushioned stabilizer and bipod in barreir bag (MIL–B–131) (8135–282–0565), 10″ x 18″.		
19	Close bag by heat sealing.		
20	Wrap each bagged weapon with cushioning material (PPP–C–843) (8135–855–6969), 18″ x 48″ (3 pieces required).		
21	Secure in place with pressure sensitive tape (PPP–T–60) (8135–890–9873), 2″ x 6″ (4 pieces required).		
22	Position four (4) bag cushioned weapons alternately in a corrugated fiberboard box (PPP–F–320) (8135–132–9067), 45½″ x 21½″ x 5½″.		
23	Cover weapons with cushioning material (PPP–C–843) (8135–855–6969), 22″ x 46″.		
24	Position one piece of corrugated fiberboard (PPP–F–320) (8135–132–9067), 21″ x 45″ in container.		
25	Position cushioning material (PPP–C–843) (8135–855–6969), 24″ x 48″.		
26	Clean, dry, preserve and package Basic Issue Items in accordance with Table A–2–2, and as specified herein.		
27	Wrap items 1, 2, and 3 (table A–2–2) in a piece of volatile paper (MIL–P–3420) (8135–985–7242), 6″ x 10″.		
28	Place items 1 through 7 (table A–2–2) in a barrier bag (MIL–B–131)(8135–282–0565), 10″ x 12″.		
29	Wrap magazines, item 8 (table A–2–2) in volatile paper (MIL–P–3420) (8135–985–7242), 9″ x 9″ (5 pieces required).		
30	Insert magazines in a barrier bag (MIL–B–131) (8135–282–0565), 10″ x 12″.		
31	Close bag by heat sealing.		
32	Position four (4) sets of bagged bipods and four (4) sets of Basic Issue Items into container.		
33	Cover bagged items with cushioning material (PPP–C–843) (8135–855–6969), 24″ x 48″.		
34	Close box and seal with pressure sensitive tape (PPP–T–60) (8135–890–9873), 2″ x 48″ (2 pieces required).		
35	The following marking shall be applied to each unit container with ink, marking, stencil, black (TT–I–559) (7510–161–0811): 1005–072–5011 Rifle, 7.62 Millimeter, M14A1, W/E 4 Each Preserved on (month-day-year) for a maximum of 180 days Gross Weight 66.00 Cube 3.500		

Step	Function	Mech	Insp
36	Assemble shipping container 46″ x 44″ x 35″ (see fig. A–2) utilizing 8D nails (FF–N–105) (5315–010–6507).		
37	Pack ten (10) rifle containers, unit packaged as above, in assembled shipping container.		
38	Close container with 8D nails (FF–N–105) (5315–010–6507).		
39	Apply steel strapping (QQ–S–781) (8135–283–0669), ¾″ x 164″ (3 pieces required).		
40	Secure strapping with seals (8135–239–5293) (3 required).		
41	The following marking shall be applied to each shipping container with minimum size 1″ letters using ink, marking, stencil, black (TT–I–559) (7510–161–0811): 1005–072–5011 Rifle, 7.62 Millimeter, M14A1, W⁄E 40 Each Preserved on (month-day-year) for a maximum of 180 days Gross Weight 842.00 Cube 49.260		
42	Preparation instructions sheets shall be completed and placed in a waterproof envelope (MIL–B–131) (8135–282–0565), size 10″ x 12″ and secured to the item/container in a conspicuous location.		
	c. Deprocessing. Prior to placing this item in service, following receipt, deprocessing action will be in reverse of check list above.		

Table A–2–1. Packaging Materials List

FSN	Item description	Unit of use qty
1005–288–3565	Swab, Small Arms Cleaning, 2½″ x 2½″, 1,000 Per Package	3 ea.
1005–336–0225	Tube, Bore, VCI Treated, .190D x 28½″	1 ea.
*1005–556–4174	Brush Cleaning, Small Arms: Bore	1 ea.
*1005–690–8441	Brush, Cleaning, Small Arms: Chamber	1 ea.
*5315–010–6507	Nail, General Purpose (FF–N–105) 8D, 2⅜″ Long, 50 Pound Carton	½ lb.
*5315–010–6511	Nail, General Purpose (FF–N–105), 16D, 3¼″ Long, 50 Pound Carton	⅓ lb.
*5315–161–8607	Nail, General Purpose (FF–N–105), 6D, 1⅞″ Long, 50 Pound Carton	⅛ lb.
*5510–220–6078	Lumber, Soft Wood (MM–L–751), 1″ x 4″	8 bf.
*5510–220–6226	Lumber, Soft Wood, 4″ x 4″ (MM–L–751)	13¼ bf.
*5530–554–8709	Plywood, Soft Wood (NN–P–530) ¾″ x 48″ x 96″ Sheet	70⅓ sf.
6850–285–8012	Solvent, Dry Cleaning (P–D–680) 55 Gallon Drum	1 pt.
6850–753–4806	Cleaning Compound Solvent (MIL–C–372), 55 Gallon Drum	1 pt.
7510–161–0811	Ink, Marking, Stencil, Black (TT–I–559), 1 Gallon Can	(***).
7920–205–3570	Rag, Wiping (DDD–R–30), 50 Pound Bale	(***).
**8135–132–9067	Fiberboard, Corrugated (PPP–F–320), 48″ x 96″ Sheet	32½ sf.
*8135–239–5293	Seal, Strapping, Closed Type W/O Ears, ¾″ x 1.7812 x 0.8075 Wide, 5,000 Per Box	3 ea.
8135–282–0565	Barrier Material,Water-Vaporproofed Flexible (MIL–B–131), 36″ x 200 Yard Roll	1 ¾yd.
*8135–282–0565	Barrier Material,Water-Vaporproofed Flexible (MIL–B–131), 36″ x 200 Yard Roll	⅓ yd.
*8135–283–0669	Strapping, Steel, Nailless (QQ–S–781), ¾″ x 0.023″, 100 Pound Coil	41 ft.
8135–855–6969	Cushioning Material, Cellulosic (PPP–C–843), ¾″ x 24″ x 167 Feet Per Package	5¼ ft.
**8135–855–6969	Cushioning Material, Cellulosic (PPP–C–843), ¾″ x 24″ x 167 Feet Per Package	11½ ft.
8135–890–9873	Pressure Sensitive Tape (PPP–T–60), 2″ x 60 Yard Roll	1⅓ yd.
**8135–890–9873	Pressure Sensitive Tape (PPP–T–60), 2″ x 60 Yard Roll	2⅔ yd.
8135–985–7242	Paper, Volatile, Packaging (MIL–P–3420), 36″ x 100 Foot Roll	4¾ ft.
9150–281–2007	Corrosion, Preventative Compound, Lubricating Oil, General Purpose (VV–L–800), 55 Gallon Drum.	1 pt.
9310–160–7858	Board, Stencil (UU–S–625), 100 Sheets	(***).

*Material requirements for 40 rifles.
**Material requirements for 4 rifles.
***These items will be required in addition to the packaging materials listed above and will be used as needed.

Table A-2-2. Preservation for Basic Issue Items

Item No.	Item description	Quantity req'd	Cleaning	Drying	Preservative	Container	Mech	Insp
1	Combination Tool	1	C-3	D-1				
2	Rod, Cleaning, Small Arms	4	C-3	D-1				
3	Swab, Holder Section, Small Arms	1	C-3	D-1				
	Cleaning Rod:							
4	Case, Small Arms Cleaning Rod	1	C-1					
5	Case, Lubricant	1	C-1					
6	Brush, Cleaning, Small Arms Bore	1	C-1					
7	Brush, Cleaning, Small Arms:							
	Chamber	1	C-1					
8	Magazine, Cartridge (20 Cartridge)	5	C-3	D-1				

EXPLANATION OF CODES

C-1 Any applicable method not injurious to the item. Normally accomplished by wiping with a dry rag (DDD-R-30) (7920-205-3570).

C-3 Wipe or scrub item with a rag (DDD-R-30) (7920-205-3570) saturated with dry-cleaning solvent (P-D-680) (6850-285-8012), or dip in solvent and brush clean.

D-1 Wipe with clean rag (DDD-R-30) (7920-205-3570) to insure removal of solvent.

P-9 Apply a light coat of corrosion preventative compound, lubricating oil, general purpose (VV-L-800) (9150-281-2007) by dipping or brushing.

P-18 Wrap item with paper volatile corrosion inhibitor (MIL-P-3420) (8135-985-7242). Place dull side of material to the inside, the foil side to outside.

P-19 Apply a light coat of corrosion preventive compound (MIL-C-16173) (8030-526-1604) by dipping or brushing. Allow to dry before handling.

NOTES

CONTAINERS:

E-Bag—Fabricated from (MIL-B-131) (8135-282-0565).
Box—Fabricated from (PPP-F-320) (8135-132-9067).
Bag Closure—Heat seal.
Box closure—RSC Cartons: Seal the center seams of top and bottom with tape (PPP-T-60) (8135-890-9873).
OPF Cartons: Seal the top center seam with tape (PPP-T-60) (8135-890-9873).

Bill of Materials

Name	Qty req'd	Material	Dimensions	FSN
Ends	2	Plywood	44" x 30" x ¾"	5530-554-8709
Sides	2	Plywood	49" x 30" x ¾"	5530-554-8709
Top	1	Plywood	49" x 45½" x ¾"	5530-554-8709
Bottom	1	Plywood	49" x 45½" x ¾"	5530-554-8709
Skids	3	Wood	4" x 4" x 45½"	5510-220-6226
Cleats (A)	4	Wood	1" x 4" x 29¾"	5510-220-6078
Cleats (B)	4	Wood	1" x 4" x 36⅝"	5510-220-6078

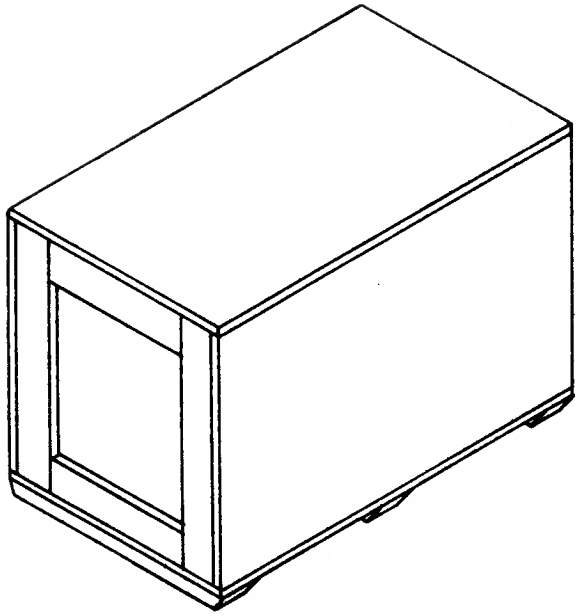

Figure A-2. Shipping Container.

APPENDIX A–3

PREPARATION INSTRUCTIONS FOR SHIPMENT: SURFACE VESSEL TRANSPORT

FSN	ITEM	DESCRIPTION
☐ 1005–073–9421	Rifle, 5.56 Millimeter, M16A1, W/E.	
☐ 1005–856–6885	Rifle, 5.56 Millimeter, M16, W/E.	

PRESERVED: _____ (Month) _____ (Day) _____ (Year)

PRESERVED FOR A MAXIMUM OF 180 DAYS

NOTE:

Function: Related to instructions to be accomplished in preparation of the equipment for shipment.

Mech: For initials of mechanic or responsible processing personnel to indicate function has been completed.

Insp: For initials of inspector certifying that function has been completed as indicated by the mechanic or processing personnel.

Step	Function	Mech	Insp
	a. Unit Responsibility.		
1	Assure that weapon is in operating condition prior to movement to processing site.		
2	Certify that weapon, magazine and containers are free of ammunition.		
3	Deliver weapon, complete with tools and equipment, to designated processing site.		
4	Unit commander or representative will remain with weapons until acceptance by responsible preservation site personnel.		
	b. Cleaning, Preservation, Packaging, Packing and Marking.		
	WARNING		
	Before cleaning and packaging, BE SURE WEAPON IS CLEAR. Do not actuate trigger until weapon has been cleared. Inspect chamber to insure that it is empty and check to see that no ammunition is in position to be introduced. Avoid having live ammunition in vicinity of work area.		
1	Disassemble weapon as necessary in preparation for thorough cleaning.		
2	Clean exterior surfaces of metal parts with cleaning rags (DDD–R–30) (7920–205–3570), saturated with solvent cleaning compound (MIL–C–372) (6850–753–4806).		
3	Clean barrel bore, chamber and heavy contaminants of exterior surfaces with brush (1005–903–1296), saturated with solvent cleaning compound (MIL–C–372) (6850–753–4806). Use rod furnished as "special tools."		
4	Further cleaning of metal parts shall be accomplished by complete immersion in dry-cleaning solvent (P–D–680) (6850–285–8012), accompanied by scrubbing and agitation or with a solvent saturated cleaning rag (DDD–R–30) (7920–205–3570).		
5	Rinse parts with clean drycleaning solvent (P–D–680) (6850–285–8012).		
6	Drain and dry cleaned parts with dry compressed air, or with wiping rags (DDD–R–30) (7920–205–3570). The barrel bore and chamber shall be thoroughly dried prior to preservative application.		
7	Cleaning of canvas, webbing, synthetic materials, and wood shall be by any process or combination of processes which will accomplish thorough cleaning without damage to the item(s) (brushing, wiping, etc.).		

Step	Function	Mech	Insp
36	The following marking shall be applied to each shipping container with minimum size 1″ letters using ink, marking, stencil, black (TT–I–559) (7510–161–0811): Federal stock number Item description 40 Each Preserved on (month-day-year) for a maximum of 180 days Gross weight 496.00 Cube 51.079		
37	Preparation instructions sheets shall be completed and placed in a waterproof envelope (MIL–B–131) (8135–282–0565), size 10″ x 12″ and secured to the item/container in a conspicuous location.		
	c. Deprocessing. Prior to placing the item in service following receipt, deprocessing action in reverse of checklist must be completed.		

Table A–3–1. Packaging Materials List

FSN	Item description	Unit of use qty
1005–288–3565	Swab, Small Arms, Cleaning, 2½″ x 2½″ 1,000 per Package	3 ea.
1005–336–0225	Bore Tube, VCI Treated, .19 O.D. x 28½″	1 ea.
*1005–903–1296	Brush, Cleaning, Small Arms: Bore	1 ea.
*5315–010–6507	Nail, General Purpose (FF–N–105) 8D 2⅜″ Lg., 50 Pounds per Carton	1 lb.
*5315–010–6511	Nail, General Purpose (FF–N–105) 16D, 3¼″ Lg., 50 Pounds per Carton	½ lb.
*5315–161–8607	Nail, General Purpose (FF–N–105) 6D, 1⅞″ Lg., 50 Pounds per Carton	⅔ lb.
*5510–220–6078	Lumber, Soft Wood (MM–L–751), 1″ x 4″	8 bf.
*5510–220–6226	Lumber, Soft Wood (MM–L–751), 4″ x 4″	15 bf.
*5530–554–8709	Plywood, Soft Wood (NN–P–530), ¾″ x 48″ x 96″ Sheet	76½ sf.
6850–285–8012	Solvent, Dry Cleaning (P–D–680), 55 Gallon Drum	1 pt.
6850–753–4806	Cleaning Compound Solvent (MIL–C–372) 55 Gallon Drum	1 pt.
7510–161–0811	Ink, Marking, Stencil, Black (TT–I–559) 1 Gallon Can	(***).
7920–205–3570	Rag, Wiping (DDD–R–30), 50 Pound Bale	(***).
**8135–132–9067	Fiberboard, Corrugated (PPP–F–320), 48″ x 96″ Sheet	40½ sf.
*8135–239–5293	Seal, Strapping, Closed Type W/O Ears, ¾″, 1.7812 x 0.8075 Wide, 5000 per Box	3 ea.
8135–282–0565	Barrier Material, Water-Vaporproofed Flexible (MIL–B–131), 36″ x 200 Yard Roll	1⅔ yd.
*8135–282–0565	Barrier Material, Water-Vaporproofed Flexible (MIL–B–131), 36″ x 200 Yard Roll	⅓ yd.
*8135–283–0669	Strapping, Steel, Nailless (QQ–S–781), ¾″ x 0.023″, 100 Pound Coil	51 ft.
8135–855–6969	Cushioning Material, Cellulosic (PPP–C–843), ¾″ x 24″ x 167 Foot Package	3⅔ ft.
**8135–855–6969	Cushioning Material, Cellulosic (PPP–C–843), ¾″ x 24″ x 167 Foot Package	8⅓ ft.
8135–890–9873	Pressure Sensitive Tape (PPP–T–60), 2″ x 60 Yard Roll	⅔ yd.
**8135–890–9873	Pressure Sensitive Tape (PPP–T–60), 2″ x 60 Yard Roll	2⅜ yd.
8135–985–7242	Paper, Volatile, Packaging (MIL–P–3420), 36″ x 100 Foot Roll	2¾ ft.
9150–281–2007	Corrosion, Preventative Compound Lubricating Oil, General Purpose (VV–L–800)	1¼ oz.
9310–160–7858	Board, Stencil, UU–S–625, 100 sh	(***).

*Material requirements for 40 weapons.
**Material requirements for 4 weapons.
***These items will be required in addition to the packaging materials listed above and will be used as needed.

Table A-3-2. Preservation for Basic Issue Items

Item No.	Item description	Qty req'd	Cleaning	Drying	Preservation	Container	Mech	Insp
1	Sling, Small Arms: M1 webbing	1	C-1					
2	Magazine Assembly (20 cartridges)	7	C-3	D-1				
3	Rod, Cleaning, Small Arms: M11E2	1	C-3	D-1				
4	Brush, Cleaning, Small Arms: Bore	1	C-1					
5	Brush, Cleaning, Small Arms: Chamber	1	C-1					
6	Case, Maintenance Equipment, Small Arms	1	C-1					

EXPLANATION OF CODES

C-1 Any applicable method not injurious to the item. Normally accomplished by wiping with a dry rag (DDD-R-30) (7920-205-3570).

C-3 Wipe or scrub item with a rag (DDD-R-30) (7920-205-3570) saturated with drycleaning solvent (P-D-680) (6850-285-8012), or dip in solvent and brush clean.

D-1 Wipe with clean rag (DDD-R-30) (7920-205-3570) to insure removal of solvent.

P-9 Apply a light coat of corrosion preventative compound, lubricating oil, general purpose (VV-L-800) (9150-281-2007) by dipping or brushing.

P-18 Wrap item with paper, volatile, corrosion inhibitor (MIL-P-3420) (8135-985-7242). Place dull side of material to the inside and foil side to outside.

P-19 Apply a light coat of corrosion preventive compound (MIL-C-16173) (8030-526-1604) by dipping or brushing. Allow to dry before handling.

NOTE

CONTAINERS:

E-Bag—Fabricated from (MIL-B-131) (8135-282-0565).

Box—Fabricated from (PPP-F-320) (8135-132-9067).

Bag closure—Heat Seal.

Box closure—RSC Cartons: Seal the center seams of top and bottom with tape (PPP-T-60) (8135-890-9873). OPF Cartons: Seal the top center seam with tape (PPP-T-60) (8135-890-9873).

Bill of Materials

Name	Qty req'd	Material	Dimensions	FSN
Ends	2	Plywood	41" x 30" x ¾"	5530-554-8709
Sides	2	Plywood	59" x 30" x ¾"	5530-554-8709
Top	1	Plywood	59" x 42½" x ¾"	5530-554-8709
Bottom	1	Plywood	59" x 42½" x ¾"	5530-554-8709
Cleats	4	Wood	1" x 4" x 29¾"	5510-220-6078
Cleats	4	Wood	1" x 4" x 33⅝"	5510-220-6078
Skids	3	Wood	4" x 4" x 42½"	5510-220-6226

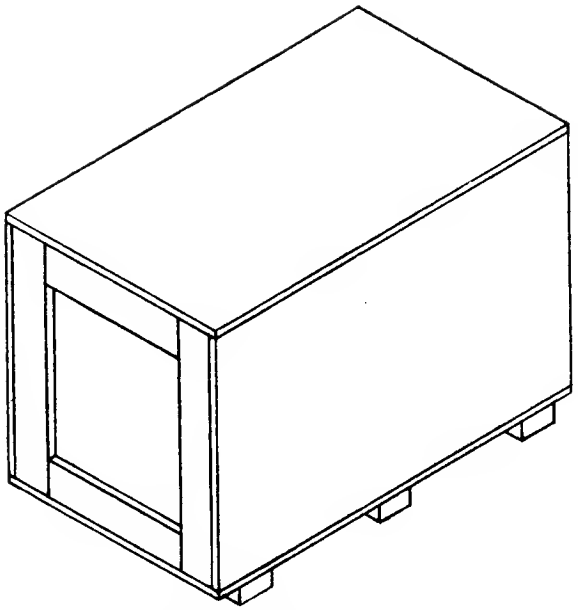

Figure A–3. Shipping Container.

APPENDIX A-4

PREPARATION INSTRUCTIONS FOR SHIPMENT: SURFACE VESSEL TRANSPORT

	FSN	ITEM DESCRIPTION
☐	1005-077-1658	Machine Gun, Caliber .50 Act M3.

PRESERVED: _____ (Month) _____ (Day) _____ (Year)

PRESERVED FOR A MAXIMUM OF 180 DAYS

NOTE:

Function: Relates to instructions to be accomplished in preparation of the equipment for shipment.

Mech: For initials of mechanic or responsible processing personnel to indicate function has been completed.

Insp: For initials of inspector certifying that function has been completed as indicated by the mechanic or processing personnel.

Step	Function	Mech	Insp
	a. Unit Responsibility.		
1	Assure that weapon and equipment are in good operating condition.		
2	Certify that weapon is free of ammunition in gun barrels, magazines and containers.		
3	Deliver complete weapon to designated processing area.		
4	Unit Commander or representative will remain with equipment until acceptance by responsible preservation site personnel.		
	b. Cleaning, Preservation, Packaging, Packing and Marking.		
	WARNING		
	Before cleaning and packaging, BE SURE WEAPON IS CLEAR. Do not actuate trigger until weapon has been cleared. Inspect chamber to insure that it is empty and check to see that no ammunition is in position to be introduced. Avoid having live ammunition in vicinity of work area.		
1	Clean all metallic surfaces by wiping with rag (DD-R-30) (7920-205-3570) saturated with cleaning solvent (MIL-C-372) (6850-753-4806).		
2	Clean barrel bore and chamber with swabs (1005-288-3565) saturated with bore cleaner (MIL-C-372) (6850-753-4806).		
3	Clean surfaces of parts having burned powder residue with a metallic bristle brush (1005-550-4037) saturated with bore cleaner (MIL-C-372) (6850-753-4806). Use rod furnished as "special tools".		
4	After cleaning with (MIL-C-372) (6850-753-4806) rinse with a dry cleaning solvent (P-D-680) (6850-285-8012).		
5	Drain and dry with compressed air or wiping rag (DDD-R-30) (7920-205-3570) changing drying position as necessary to accomplish thorough draining.		
6	Dry gun barrel and chamber with swabs (1005-288-3565).		
7	All surfaces of machine gun shall be thoroughly dried prior to preservation.		
8	Preserve all metallic surfaces with preservative oil (VV-L-800) (9150-281-2007).		
9	Completely drain excess oil prior to reassembly and packaging.		

Step	Function	Mech	Insp
10	Insert a bore tube volatile corrosion inhibitor (1005–336–0216) into barrel bore extending tube one inch beyond barrel end and crimp over.		
11	Wrap retracting slide handle assembly in paper volatile packaging (MIL–P–3420) (8135–985–7242) size 3″ x 5″.		
12	Wrap a piece of paper volatile packaging (MIL–P–3420) (8135–985–7242) size 4″ x 12″ around barrel jacket.		
13	Secure wrapped handle assembly to wrapped barrel jacket with (PPP–T–60) (8135–890–9873) tape 2″ x 12″.		
14	Wrap machine gun with paper volatile packaging (MIL–P–3420) (8135–985–7242) size 24″ x 65″.		
15	Cushion wrapped machine gun with cellulosic material (PPP–C–843) (8135–855–6969) size 24″ x 62″.		
16	Secure cushioning with tape (PPP–T–60) (8135–890–9873) 2″ x 20″ (5 pieces).		
17	Locate cushioned machine gun into a bag (MIL–B–131) (8135–282–0565) size 14″ x 65″.		
18	Heat seal bag reducing the air volume in the bag to a practical minimum.		
19	Fabricate a fiberboard box 60″ x 8″ x 9″ inside dimensions (8135–132–9067) (PPP–F–320).		
20	Cushioning material three (3) thicknesses (MIL–C–7769) (8135–132–9568) size 8″ x 9″ shall be located in each end of the container.		
21	Cushioning material (MIL–C–7769) (8135–132–9568) two (2) thicknesses 9″ x 54″ shall be located in bottom of fiberboard container.		
22	Locate bagged and cushioned machine gun in cushioned container.		
23	Locate two (2) additional pieces of cushioning material 9″ x 54″ (MIL–C–7769) (8135–132–9568) on top of wrapped machine gun.		
24	Close container with (PPP–T–60) (8135–890–9873) tape 2″ x 64″ (2 pcs. required).		
25	Apply three (3) girthwise straps of filament reinforced pressure sensitive tape (PPP–T–97) (8135–582–4772) 1″ x 40″ (3 pcs. required).		
26	Apply the following information on each fiberboard container with stencil ink (TT–I–559) (7510–161–0811): 1005–077–1658 Machine Gun Caliber .50 M3 Acft Basic W/Recoil Adapter 1 Each Preserved on (month-day-year) for a maximum of 180 days Gross Weight 75. Cube 2. 83		
27	Assemble exterior shipping container, 60½″ x 25¾″ x 28¾″, inside dimensions (see Figure A–4) with 8D nails (FF–N–105) (5315–010–6507) and apply skids with 10D nails (FF–N–105) (5315–010–6509).		
28	Pack nine (9) machine guns in assembled shipping container.		
29	Close container with 8D nails (FF–N–105) (5315–010–6507).		
30	Apply three (3) steel straps girthwise around shipping container (QQ–S–781) (8135–283–0669), ¾″ x 115″.		
31	Secure strapping with seals, ¾″ (8135–239–5293) (3 required).		
32	Apply the following marking in 1″ letters on cleated plywood box with ink, marking, stencil, black (TT–I–559) (7510–161–0811): 1005–077–1658 Machine Gun Caliber .50, M3 Acft, Basic W/Recoil Adapter 1 Each Preserved on (month-day-year) for a maximum of 180 days Gross Weight 770. Cube 30		

Step	Function	Mech	Insp
33	Preparation instruction sheets shall be completed and placed in a waterproof envelope (MIL-B-131) (8135-282-0565) 10″ x 12″ and secured to the item/container in a conspicuous location.		
	c. Deprocessing. Prior to placing this item in service, following receipt, deprocessing action will be in reverse of checklist above.		

Table A-4. Packaging Materials List

FSN	Item description	Unit of use qty
1005-288-3565	Swab, Small Arms Cleaning, 2½″ x 2½″, 1,000 Per Package	10 ea.
1005-336-0216	Bore,Tube,VCI Treated, .45 O.D. x 45½″	1 ea.
1005-550-4037	Brush, Cleaning, Cal. .50, M4	1 ea.
*5315-010-6507	Nail, General Purpose (FF-N-105) 8D, 2⅜″ Long, 50 Pounds Per Carton	1 lb.
*5315-010-6509	Nail, General Purpose (FF-N-105) 10D, 2⅞″ Long, 50 Pounds Per Carton	½ lb.
*5510-220-6078	Lumber, Soft Wood (MM-L-751), 1″ x 4″	5½ bf.
*5510-220-6194	Lumber, Soft Wood (MM-L-751), 2″ x 4″	5 bf.
*5530-554-8709	Plywood, Soft Wood (NN-P-530) ¾″ x 48″ x 96″ Sheet	61 sf.
6850-285-8012	Solvent, Dry Cleaning (P-D-680), 55 Gallon Drum	1 pt.
6850-753-4806	Cleaning, Compound Solvent (MIL-C-372) 55 Gallon Drum	1 pt.
7510-161-0811	Ink, Marking, Stencil, Black (TT-I-559) 1 Gallon Can	(**).
7920-205-3570	Rag,Wiping (DDD-R-30), 50 Pound Bale	(**).
8135-132-9067	Fiberboard, Corrugated (PPP-F-320), 48″ x 96″ Sheet	17 sf.
8135-132-9568	Cushioning, Bound Fiber (MIL-C-7769), 24″ x 72″ Sheet	8¼ ft.
*8135-239-5293	Seal, Strapping, Closed Type W/O Ears, ¾″, 1.7812 x 0.8075 Wide, 5,000 Per Box	3 ea.
8135-282-0565	Barrier Material,Water-Vaporproofed, Flexible (MIL-B-131), 36″ x 200 Yard Roll	1½ yd.
*8135-282-0565	Barrier Material,Water-Vaporproofed, Flexible (MIL-B-131), 36″ x 200 Yard Roll	⅓ yd.
*8135-283-0669	Strapping, Steel, Nailless (QQ-S-781), ¾″ x 0.023″, 100 Pound Coil	29¾ ft.
8135-582-4772	Filament-Reinforced Pressure Sensitive Tape (PPP-T-97), 1″ x 60 Yard Roll	3½ yd.
8135-855-6969	Cushioning Material, Cellulosic (PPP-C-843), ¾″ x 24″ x 167 Foot Package	5¼ ft.
8135-890-9873	Pressure Sensitive Tape (PPP-T-60), 2″ x 60 Yard Roll	6⅔ yd.
8135-985-7242	Paper,Volatile, Packaging (MIL-P-3420), 36″ x 100 Foot Roll	3¾ ft.
9150-281-2007	Corrosion Preventative Compound, Lubricating Oil, General Purpose (VV-L-800), 55 Gallon Drum.	1 pt.
9310-160-7858	Board, Stencil (UU-S-625), 100 Sheets	(**).

*Material requirements for 9 machine guns.
**These items will be required in addition to the packaging materials listed above and will be used as needed.

Bill of Materials

Name	No. req'd	Material	Dimensions	FSN
Cleats Horizontal	4	Wood	1″ x 4″ x 28¾″	5510-220-6078
Cleats Vertical	4	Wood	1″ x 4″ x 18½″	5510-220-6078
Ends	2	Plywood	28¾″ x 25¾″ x ¾″	5530-554-8709
Sides	2	Plywood	63¾″ x 25¾″ x ¾″	5530-554-8709
Top	1	Plywood	63¾″ x 30¼″ x ¾″	5530-554-8709
Bottom	1	Plywood	63¾″ x 30¼″ x ¾″	5530-554-8709
Skids	3	Wood	2″ x 4″ x 30¼″	5510-220-6194

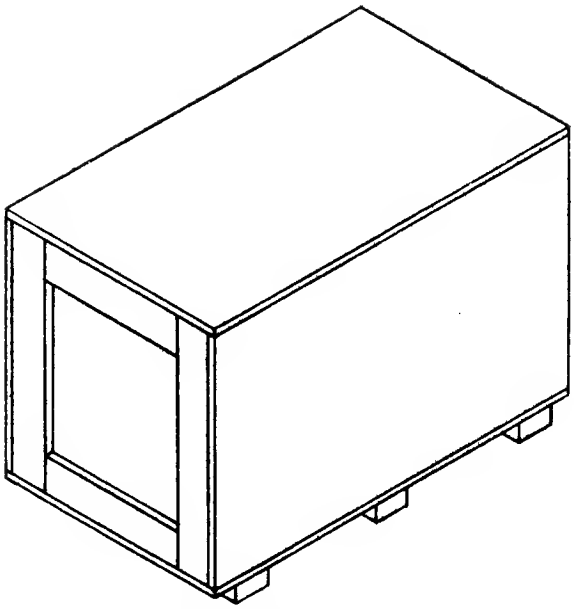

Figure A–4. Shipping Container.

APPENDIX A–5

PREPARATION INSTRUCTIONS FOR SHIPMENT: SURFACE VESSEL TRANSPORT

	FSN	ITEM DESCRIPTION
☐	1005–214–0934	Revolver, Cal .38 2″ barrel, W/E.
☐	1005–317–2468	Pistol, Cal .38, Model M, W/E.

PRESERVED: _____ (Month) _____ (Day) _____ (Year)

PRESERVED FOR A MAXIMUM OF 180 DAYS

NOTE:

Function: Relates to instructions to be accomplished in preparation of the equipment for shipment.

Mech: For initials of mechanic or responsible processing personnel to indicate function has been completed.

Insp: For initials of inspector certifying that function has been completed as indicated by the mechanic or processing personnel.

Step	Function	Mech	Insp
	a. Unit Responsibility.		
1	Assure that weapon is in good operating condition.		
2	Certify that weapon and containers are free of ammunition and explosives.		
3	As directed, weapon complete with tools and equipment, will be delivered to designated processing site.		
4	Unit Commander, or representative will remain with equipment until acceptance by responsible preservation site personnel.		
	b. Cleaning, Preservation, Packaging, Packing, and Marking.		
	WARNING Before cleaning and packaging Be Sure Weapon Is Clear. Do not actuate trigger until weapon has been cleared. Inspect chamber to insure that it is empty and check to see that no ammunition is in position to be introduced. Avoid having live ammunition in vicinity of work area.		
1	Disassemble weapon as necessary to accomplish thorough cleaning.		
2	Clean barrel bore, chamber, and any parts having heavy contaminates with a metallic brush (1005–903–1296) saturated with solvent, cleaning compound (MIL–C–372) (6850–753–4806). Use rod furnished as "special tools."		
3	Remove cleaner from bore and chamber using swab, small arms, size 2½″ x 2½″ (1005–288–3565).		
4	Further cleaning of all surfaces shall be accomplished by complete immersion, or, by wiping with rags (DDD–R–30) (7920–205–3570), saturated with solvent (P–D–680) (6850–285–8012), accompanied by scrubbing and agitation cleaning.		
5	Position parts to allow complete drainage.		
6	Rinse parts in clean solvent (P–D–680) (6850–285–8012), to remove residues.		
7	Drain and dry with compressed air, or wipe with rag. (DDD–R–30) (7920–205–3570).		
8	Cleaning of canvas, webbing, synthetic materials, and wood, shall be by any process, or combination of processes which will accomplish thorough cleaning without damage to the item(s). Clean by brushing, wiping, etc.		
9	Reassemble weapon.		
10	Metallic surfaces of weapons shall be coated with corrosion preventative compound (VV–L–800) (9150–281–2007), applied by dipping.		

Step	Function	Mech	Insp
11	Drain excess oil from weapon, changing draining position as necessary to accomplish thorough drainage.		
12	Wrap weapon with a 12″ x 18″ piece of paper, volatile, packaging (MIL–P–3420) (8135–985–7242).		
13	Place each wrapped weapon in a 10″ x 12″ bag (MIL–B–131) (8135–282–0565).		
14	Close bag by heat sealing.		
15	Place sealed bag in unit fiberboard box (PPP–F–320) (8135–132–9067), 10½″ x 6″ x 3½″.		
16	Rod, cleaning, shall be cleaned by wiping with rags (DDD–R–30) (7920–205–3570).		
17	Dry rod using compressed air, or by wiping with rags (DDD–R–30) (7920–205–3570).		
18	Brush, cleaning, shall be cleaned by immersion, followed by agitation in solvent (P–D–680) (6850–285–8012).		
19	Drain excess solvent from brush and dry with compressed air.		
20	Overwrap cleaning rod and brush with volatile paper (MIL–P–3420) (8135–985–7242), 4″ x 9″.		
21	Clean holster by wiping with rags (DDD–R–30) (7920–205–3570).		
22	Dry holster by wiping with rags (DDD–R–30) (7920–205–3570).		
23	Wrap holster with barrier material (MIL–B–121) (8135–226–3124), 12″ x 12″.		
24	Secure wrap with tape (PPP–T–60) (8135–890–9873), 2″ x 4″ (3 pieces required).		
25	Place wrapped cleaning rod and brush, together with wrapped holster in the unit container with the packaged weapon.		
26	Fill void space of unit container with cushioning material (PPP–C–843) (8135–855–6969) 12″ x 24″.		
27	Seal the center seams of top and bottom of the container with tape (PPP–T–60) (8135–890–9873) 2″ x 13″ (2 pieces required).		
28	The following marking shall be applied to each unit container with ink, marking, stencil, black (TT–I–559) (7510–161–0811): Federal stock number Item description 1 each Preserved on (month-day-year) for a maximum of 180 days Gross weight: 2.00 Cube: .166		
29	Assemble cleated plywood shipping container, 33¼″ x 26¼″ x 24⅜″ in accordance with figure A–5, using 8D nails (FF–N–105) (5315–010–6507), 10D nails (FF–N–105) (5315–010–6509) and 6D nails (FF–N–105) (5315–161–8607).		
30	Place 72 unit packaged weapons, w/e, in a shipping container (fig. A–5).		
31	Close shipping container with 8D nails (FF–N–105) (5315–010–6507).		
32	Secure shipping container with steel strapping (QQ–S–781) (8135–283–0669) ¾″ x 114″ long (3 pieces).		
33	Secure steel strapping with three (3) seals, ¾″ (8135-239-5293).		
34	The following marking shall be applied to each shipping container with minimim size 1″ letters using ink marking, stencil, black (TT–I–559) (7510–161–0811): Federal stock number Item description 72 Each Preserved on (month-day-year) for a maximum of 180 days Gross weight: 234.00 Cube: 16.58		
35	Preparation instructions sheets shall be completed and placed in a waterproof envelope (MIL–B–131) (8135–282–0565), 10″ x 12″ and secured to the item/container in a conspicuous location.		

Step	Function	Mech	Insp
	c. Deprocessing. Prior to placing this item in service, deprocessing action will be in reverse of check-list above.		

Table A–5. Packaging Materials List

FSN	Item description	Unit of use qty.
1005–288–3565	Swab, Small Arms Cleaning, 2½″ x 2½″, 1,000 per package	1 ea.
*1005–903–1296	Brush, Cleaning, Small Arms, Chamber	1 ea.
*5315–010–6507	Nail, General Purpose (FF–N–105) 8D, 2⅜″ Lg., 50 Pounds per Carton	½ lb.
*5315–010–6509	Nail, General Purpose (FF–N–105) 10D, 2⅞″ Lg., 50 Pounds per Carton	⅛ lb.
*5315–161–8607	Nail, General Purpose (FF–N–105) 6D, 1⅞″ Lg., 50 Pounds per Carton	½ lb.
*5510–220–6078	Lumber, Soft Wood (MM–L–751), 1″ x 4″	4¾ bf.
*5510–220–6214	Lumber, Soft Wood (MM–L–751), 3″ x 4″	4¾ bf.
*5530–554–8709	Plywood, Soft Wood (NN-P-530), ¾″ x 48″ x 96″ Sheet	35⅛ bf.
6850–285–8012	Solvent, Dry Cleaning (P–D–680), 55 Gallon Drum	1 pt.
6850–753–4806	Cleaning Compound Solvent (MIL–C–372) 55 Gallon Drum	1 pt.
7510–161–0811	Ink, Marking, Stencil, Black (TT–I–559) 1 Gallon Can	(**).
7920–205–3570	Rag, Wiping (DDD–R–30), 50 Pound Bale	(**).
8135–132–9067	Fiberboard, Corrugated, (PPP–F–320), 48″ x 96″ Sheet	2½ sf.
8135–226–3124	Barrier Material, Greaseproof, Waterproof, Flexible (MIL–B–121), 36″ x 200 Yard Roll	⅛ yd.
*8135–239–5293	Seal, Strapping, Closed Type W/O Ears, ¾″, 1.7812 x 0.8075 Wide, 5,000 per Box	3 ea.
8135–282–0565	Barrier Material, Water-Vaporproofed, Flexible (MIL–B–131), 36″ x 200 Yard Roll	½ yd.
*8135–282–0565	Barrier Material, Water-Vaporproofed, Flexible (MIL–B–131), 36″ x 200 Yard Roll	⅓ yd.
*8135–283–0669	Strapping, Steel, Nailless (QQ–S–781) ¾″ x 0.023″, 100 Pound Coil	28 ft.
8135–855–6969	Cushioning Material, Cellulosic (PPP–C–843), ¾″ x 24″ x 167 Foot Package	1 ft.
8135–890–9873	Pressure Sensitive Tape (PPP–T–60), 2″ x 60 Yard Roll	1 yd.
8135–985–7242	Paper, Volatile, Packaging (MIL–P–3420), 36″ x 100 Foot Roll	½ ft.
9150–281–2007	Corrosion Preventative Compound, Lubricating Oil, General Purpose (VV–L–800), 55 Gallon Drum.	1 pt.
9310–160–7858	Board, Stencil, UU–S–625, 100 sh	(**).

*Material requirements for (72) revolvers, W/E.
**These items will be required in addition to the packaging materials listed above and will be used as needed.

Bill of Materials

Name	Qty Rec'd	Material	Dimensions	FSN
Ends	2	Plywood	26¼″ x 24⅜″ x ¾″	5530–554–8709
Sides	2	Plywood	36¼″ x 24⅜″ x ¾″	5530–554–8709
Top	1	Plywood	36¼″ x 27¾″ x ¾″	5530–554–8709
Bottom	1	Plywood	36¼″ x 27¾″ x ¾″	5530–554–8709
Cleats	4	Wood	1″ x 4″ x 19″	5510–220–6078
Cleats	4	Wood	1″ x 4″ x 24¼″	5510–220–6078
Skid	2	Wood	3″ x 4″ x 27¾″	5510–220–6214

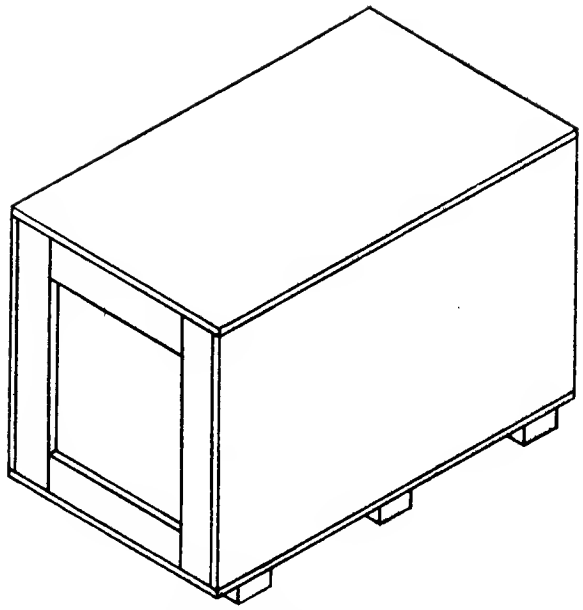

Figure A-5. Shipping Container.

APPENDIX A–6

PREPARATION INSTRUCTIONS FOR SHIPMENT: SURFACE VESSEL TRANSPORT

	FSN	ITEM DESCRIPTION
☐	1005–317–2464	Revolver, Caliber .38, 4″ barrel, W/Holster.
☐	1005–691–1288	Revolver, Caliber .38, 4″ barrel, W/Holster.
☐	1005–840–7304	Revolver, Caliber .38, 4″ barrel, W/Holster.

PRESERVED: _____ (Month) _____ (Day) _____ (Year)

PRESERVED FOR A MAXIMUM OF 180 DAYS

NOTE:

Function: Relates to instructions to be accomplished in preparation of the equipment for shipment.

Mech: For initials of mechanic or responsible processing personnel to indicate function has been completed.

Insp: For initials of inspector certifying that function has been completed as indicated by the mechanic or processing personnel.

Step	Function	Mech	Insp
	a. Unit Responsibility.		
1	Assure that weapon is in good operating condition.		
2	Certify that weapon and container's are free of ammunition and explosives.		
3	As directed, weapon, complete with tools and equipment, will be delivered to designated processing site.		
4	Unit Commander, or representative will remain with equipment until acceptance by responsible preservation site personnel.		
	b. Cleaning, Preservation, Packaging, Packing, and Marking.		
	WARNING Before cleaning and packaging, Be Sure Weapon is Clear. Do not actuate trigger until weapon has been cleared. Inspect chamber to insure that it is empty and check to see that no ammunition is in position to be introduced. Avoid having live ammunition in vicinity of work area.		
1	Disassemble weapon as necessary to accomplish thorough cleaning.		
2	Clean barrel bore, chambers and any parts having heavy contaminates with a metallic brush (1005–903–1296) saturated with solvent, cleaning (MIL–C–372) (6850–753–4806). Use rod furnished as "special tools".		
3	Remove cleaner from bore and chambers using swabs, size 2½″ x 2½″ (1005–288–3565).		
4	Further cleaning of oil surfaces shall be accomplished by complete immersion, or by wiping with rags (DDD–R–30) (7920–205–3570), saturated with solvent (P–D–680) (6850–285–8012) accomplished by scrubbing and agitation.		
5	Position parts to allow complete drainage.		
6	Rinse parts in clean solvent (P–D–680) (6850–285–8012), to remove residues.		
7	Drain, and dry with compressed air, or wipe with rags (DDD–R–30) (7920–205–3570).		
8	Cleaning of canvas, webbing, synthetic materials and wood shall be by any process, or combination of processes which will accomplish thorough cleaning without damage to the item(s). Clean by brushing, wiping, etc.		
9	Reassemble weapon.		

Step	Function	Mech	Insp
10	Metallic surfaces of weapons shall be coated with corrosion preventative compound (VV–L–800) (9150–281–2007) applied by dipping.		
11	Drain excess oil from weapon, changing draining position as necessary to accomplish thorough drainage.		
12	Wrap revolver with a 12″ x 18″ piece of paper, packaging (MIL–P–3420) (8135–985–7242).		
13	Place each wrapped revolver in an 9″ x 12″ bag (MIL–B–131) (8135–282–0565).		
14	Close bag by heat sealing.		
15	Clean holster by wiping with rags (DDD–R–30) (7920–205–3570).		
16	Fold any straps or thongs around body of holster.		
17	Wrap each holster in barrier material (MIL–B–121) (8135–226–3124) size 12″ x 16″ and secure with tape (PPP–T–60) (8135–890–9873) size 2″ x 4″ (3 pieces required).		
18	Place revolver and holster in a fiberboard box (PPP–F–320) (8135–132–9067) size 10½″ x 6″ x 3″.		
19	Fill void space of box with cushioning material (PPP–C–843) (8135–855–6969) 24″ x 24″ x ¾″.		
20	Seal the center seams of top and bottom of the box with tape (PPP–T–60) (8135–890–9873) size 2″ x 13″.		
21	The following shall be applied on each unit container with ink, marking, stencil, black (TT–I–559) (7510–161–0811): Federal Stock Number Revolver, Caliber .38, 4″ Barrel, W/holster Preserved on (month-day-year) for a maximum of 180 days 1 Each Gross weight: 1.55 Cube: .144		
22	Assemble cleated plywood shipping container, size 34¾″ x 32¾″ x 28⅜″ in accordance with figure A–6, using 8D nails (FF–N–105) (5315–010–6507), 10D nails (FF–N–105) (5315–010–6509), and 6D nails (FF–N–105) (5315–161–8607).		
23	Place 120 revolvers with holsters, unit packaged as above in a shipping container (fig. A–6).		
24	Close shipping container with 8D nails (FF–N–105) (5315–010–6507).		
25	Secure shipping container with steel strapping (QQ–S–781) (8135–283–0669) size ¾″ x 72″ long (3 pieces required).		
26	Secure steel strapping with 3 seals, ¾″ (8135–239–5293).		
27	The following marking shall be applied to each shipping container with minimum size 1″ letters with ink, marking, stencil, black (TT–I–559) (7510–161–0811): Federal Stock Number Revolver, Caliber .38, 4″ Barrel, W/Holster 120 Each Preserved on (month-day-year) for a maximum of 180 days Gross Weight: 315.00 Cube: 24.66		
28	Preparation instructions sheets shall be completed and placed in a waterproof envelope (MIL–B–131) (8135–282–0565) size 10″ x 12″ and secured to the item/container in a conspicuous location.		
	c. Deprocessing. Prior to placing the item in service, deprocessing action in reverse of checklist must be completed.		

Table A–6. Packaging Materials List

FSN	Item description	Unit of use qty
1005–288–3565	Swab, Small Arms Cleaning, 2½″ x 2½″, 1,000 Per Package	1 ea.
*1005–903–1296	Brush, Cleaning, Small Arms	1 ea.
*5315–010–6507	Nail, General Purpose (FF–N–105), 8D, 2⅜″ long, 50 Pound Carton	¾ lb.
*5315–010–6509	Nail, General Purpose (FF–N–105), 10D, 2⅞″ long, 50 Pound Carton	¼ lb.
*5315–161–8607	Nail, General Purpose (FF–N–105), 6D, 1⅞″ long, 50 Pound Carton	½ lb.
*5510–220–6078	Lumber, Soft Wood, (MM–L–751), 1″ x 4″	6 bf.
*5510–220–6214	Lumber, Soft Wood, (MM–L–751), 3″ x 4″	5¾ bf.
*5530–554–8709	Plywood, Soft Wood, (NN–P–530), ¾″ x 48″ x 96″ sheet	46 sf.
6850–285–8012	Solvent, Dry Cleaning (P–D–680) 55 Gallon Drum	1 pt.
6850–753–4806	Cleaning Compound Solvent (MIL–C–372), 55 Gallon Drum	1 pt.
7510–161–0811	Ink, Marking, Stencil, Black (TT–I–559), 1 Gallon Can	(**).
7920–205–3570	Rag, Wiping (DDD–R–30), 50 Pound Bale	(**).
8135–132–9067	Fiberboard, Corrugated (PPP–F–320), 48″ x 96″ sheet	2¼ sf.
8135–226–3124	Barrier Material, Greaseproof, Waterproof Flexible (MIL–B–121), 36″ x 200 Yard Roll	⅛ yd.
*8135–239–5293	Seal, Strapping, Closed Type W/O Ears, ¾″, 1.7812 x 0.8075 Wide, 5,000 Per Box	3 ea.
8135–282–0565	Barrier Material, Water-Vaporproofed Flexible (MIL–B–131), 36″ x 200 Yard Roll	¼ yd.
*8135–282–0565	Barrier Material, Water-Vaporproofed Flexible (MIL–B–131), 36″ x 200 Yard Roll	⅓ yd.
*8135–283–0669	Strapping Steel, Nailless (QQ–S–781), ¾″ x 0.023″, 100 Pound Coil	22⅔ ft.
8135–855–6969	Cushioning Material, Cellulosic (PPP–C–843), ¾″ x 24″ x 167 Feet Per Package	2 ft.
8135–890–9873	Pressure Sensitive Tape (PPP–T–60), 2″ x 60 Yard Roll	¾ yd.
8135–985–7242	Paper, Volatile, Packaging (MIL–P–3420) 36″ x 100 Foot Roll	¼ ft.
9150–281–2007	Corrosion, Preventative Compound, Lubricating Oil, General Purpose (VV–L–800), 55 Gallon Drum.	1¼ oz.
9310–160–7858	Board, Stencil, UU–S–625, 100 sh	(**).

*Material requirements for 120 revolvers.
**These items will be required in addition to the packaging materials listed above and will be used as needed.

Bill of Materials

Name	No. req'd	Material	Dimensions	FSN
End	2	Plywood	32¾″ x 28⅜″ x ¾″	5530–554–8709
Side	2	Plywood	37¾″ x 28⅜″ x ¾″	5530–554–8709
Top	1	Plywood	37¾″ x 34¼″ x ¾″	5530–554–8709
Bottom	1	Plywood	37¾″ x 34¼″ x ¾″	5530–554–8709
Vertical Cleat	4	Wood	1″ x 4″ x 28¼″	5510–220–6078
Horizontal Cleat	4	Wood	1″ x 4″ x 25½″	5510–220–6078
Skid	2	Wood	3″ x 4″ x 34¼″	5510–220–6214

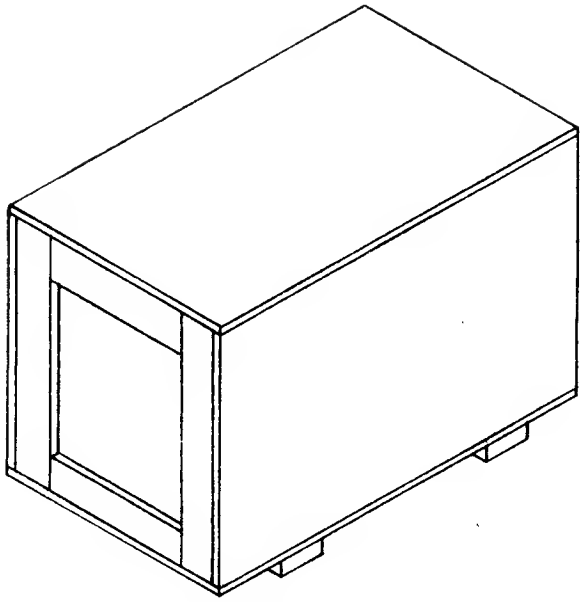

Figure A-6. Shipping container.

APPENDIX A-7

PREPARATION INSTRUCTIONS FOR SHIPMENT: SURFACE VESSEL TRANSPORT

	FSN	ITEM DESCRIPTION
☐	1005-317-2471	Rifle, Caliber .22, Winchester, Model 75, W/E.
☐	1005-840-3758	Rifle, Caliber .22, Remington, Model 513T, W/E.

PRESERVED: _____ (Month) _____ (Day) _____ (Year)

PRESERVED FOR A MAXIMUM OF 180 DAYS

NOTE:

Function: Relates to instructions to be accomplished in preparation of the equipment for shipment.

Mech: For initials of mechanic or responsible processing personnel to indicate function has been completed.

Insp: For initials of inspector certifying that function has been completed as indicated by the mechanic or processing personnel.

Step	Function	Mech	Insp
	a. Unit Responsibility.		
1	Assure that weapon is in operating condition prior to movement to processing site.		
2	Certify that weapon, magazine and containers are free of ammunition.		
3	Deliver weapon, complete with tools and equipment to designated processing site.		
4	Unit Commander, or representative, will remain with weapons until acceptance by responsible preservation site personnel.		
	b. Cleaning, Preservation, Packaging, Packing and Marking.		
	WARNING		
	Before cleaning and packaging, Be Sure Weapon Is Clear. Do not actuate trigger until weapon has been cleared. Inspect chamber to insure that it is empty and check to see that no ammunition is in position to be introduced. Avoid having live ammunition in vicinity of work area.		
1	Disassemble weapon, as necessary, in preparation for thorough cleaning.		
2	Clean exterior surfaces of metal parts with cleaning rags (DDD-R-30) (7920-205-3570), saturated with solvent cleaning compound (MIL-C-372) (6850-753-4806).		
3	Clean barrel bore, chamber and heavy contaminants of exterior metal surfaces with a snug fitting bristle brush (1005-903-1296), and swabs (1005-288-3565), saturated with solvent cleaning compound (MIL-C-372) (6850-753-4806). Use rod furnished as "special tools".		
4	Further cleaning of parts shall be accomplished by complete immersion in dry cleaning solvent (P-D-680) (6850-285-8012), accompanied by scrubbing and agitation or with a solvent saturated cleaning rag (DDD-R-30) (7920-205-3570).		
5	Rinse parts with clean dry cleaning solvent (P-D-680) (6850-285-8012).		
6	Drain and dry clean metal parts with dry compressed air or with wiping rags (DDD-R-30) (7920-205-3570). The barrel bore and chamber shall be thoroughly dried prior to preservative application.		
7	Cleaning of canvas, webbing synthetic materials and wood shall be by any process or combination of processes which will accomplish thorough cleaning without damage to the item(s) (brushing, wiping, etc.).		
8	Apply general purpose lubricating oil (VV-L-800) (9150-281-2007), to all metallic surfaces by any applicable procedure. Excess oil shall be drained prior to packaging.		
9	Reassemble weapon.		

Step	Function	Mech	Insp
10	Insert a VCI treated bore tube (1005–336–0225), into bore of barrel bending protruding portion over the muzzle end.		
11	Fold sling and wrap with a piece of volatile paper (MIL–P–3420) (8135–985–7242), 8″ x 12″.		
12	Wrap magazine with a piece of volatile paper (MIL–P–3420) (8135–985–7242), 9″ x 9″.		
13	Wrap weapon with a piece of volatile paper (MIL–P–3420) (8135–985–7242), 18″ x 50″.		
14	Insert weapon, sling and magazine in a barrier bag (MIL–B–131) (8135–282–0565), 12″ x 50″.		
15	Close bag by heat sealing.		
16	Wrap each bagged weapon with cushioning material (PPP–C–843) (8135–855–6969), 18″ x 50″.		
17	Secure cushioning material with pressure sensitive tape (PPP–T–60) (8135–890–9873), 2″ x 6″ (4 pieces).		
18	Position four (4) bag-cushioned weapons alternately in a corrugated fiberboard box (PPP–F–320) (8135–132–9067), 46½″ x 21½″ x 3½″.		
19	Cover weapons with cushioning material (PPP–C–843) (8135–855–6969), 22″ x 46″.		
20	Close box and seal with pressure sensitive tape (PPP–T–60) (8135–890–9873), 2″ x 49″ (2 pieces required).		
21	The following markings shall be applied to each unit container with ink, marking, stencil, black (TT–I–559) (7510–161–0811); utilizing weight specified below: Federal Stock Number Item description 4 Each Preserved on (month-day-year) for a maximum of 180 days Gross Weight: Cube: 2.367 Federal stock number: *Weight* 1005–317–2471 ..... 38.00 1005–840–3758 ..... 36.00		
22	Assemble a shipping container, 50″ x 45″ x 41¼″ (see fig. A–7), utilizing 8D nails (FF–N–105) (5315–010–6507), 16D nails (FF–N–105) (5315–010–6511) and 6D nails (FF–N–105) (5315–161–8607).		
23	Place twenty (20) rifle containers, as unit packaged above, in shipping container.		
24	Secure lid with 8D nails (FF–N–105) (5315–010–6507).		
25	Apply steel strapping to shipping container (QQ–S–781) (8135–283–0669), ¾″ x 195″ (3 pieces required).		
26	Secure steel strapping with seals, ¾″ (8135–239–5293) (3 required).		
27	The following markings shall be applied to each shipping container with minimum size 1″ letters, using ink, marking, stencil, black (TT–I–559) (7510–161–0811) utilizing weights specified below: Federal Stock Number Item description 80 Each Preserved on (month-day-year) for a maximum of 180 days Gross Weight: Cube: 66.190 Federal stock number: *Weight* 1005–317–2471 ..... 946.00 1005–840–3758 ..... 906.00		
28	Preparation instructions sheets shall be completed and placed in a waterproof envelope (MIL–B–131) (8135–282–0565), 10″ x 12″ and secured to the item/container in a conspicuous location.		

Step	Function	Mech	Insp
	c. Deprocessing. Prior to placing this item in service, following receipt, deprocessing action will be in reverse of checklist above.		

Table A–7. Packaging Materials List

FSN	Item description	Unit of use qty
1005–288–3565	Swab, Small Arms Cleaning, 2½'' x 2½'', 1,000 per Package	5 ea.
1005–336–0225	Bore, Tube, VCI Treated, 0.19 O.D. x 28½''	1 ea.
*1005–903–1296	Brush, Cleaning, Small Arms, Bore	1 ea.
*5315–010–6507	Nail, General Purpose (FF–N–105) 8D, 2⅜'' Lg., 50 Pounds per Carton	1 lb.
*5315–010–6511	Nail, General Purpose (FF–N–105), 16D, 3¼'' Lg., 50 Pounds per Carton	½ lb.
*5315–161–8607	Nail, General Purpose (FF–N–105), 6D, 1⅞'' Lg., 50 Pounds per Carton	½ lb.
*5510–220–6078	Lumber, Soft Wood (MM–L–751), 1'' x 4''	8 bf.
*5510–220–6226	Lumber, Soft Wood (MM–L–751), 4'' x 4''	15 bf.
*5530–554–8709	Plywood, Soft Wood (NN–P–530), ¾'' x 48'' x 96'' Sheet	85½ sf.
6850–285–8012	Solvent, Dry Cleaning (P–D–680), 55 Gallon Drum	1 pt.
6850–753–4806	Cleaning Compound Solvent (MIL–C–372), 55 Gallon Drum	1 pt.
7510–161–0811	Ink, Marking, Stencil, Black (TT–I–559) 1 Gallon Can	(***).
7920–205–3570	Rag, Wiping (DDD–R–30), 50 Pound Bale	(***).
**8135–132–9067	Fiberboard, Corrugated (PPP–F–320), 48'' x 96'' Sheet	24½ sf.
*8135–239–5293	Seal, Strapping, Closed Type W/O Ears, ¾'', 1.7812 x 0.8075 Wide, 5,000 per Box	3 ea.
8135–282–0565	Barrier Material, Water-vaporproofed, Flexible (MIL–B–131), 36'' x 200 Yard Roll	1¼ yd.
*8135–282–0565	Barrier Material, Water-Vaporproofed, Flexible (MIL–B–131), 36'' x 200 Yard Roll	⅓ yd.
*8135–283–0669	Strapping, Steel Nailless (QQ–S–781), ¾'' x 0.023'',100 Pound Coil	47 ft.
8135–855–6969	Cushioning Material, Cellulosic (PPP–C–843), ¾'' x 24'' x 167 Foot Package	3⅛ ft.
**8135–855–6969	Cushioning Material, Cellulosic (PPP–C–843), ¾'' x 24'' x 167 Foot Package	3½ ft.
8135–890–9873	Pressure Sensitive Tape (PPP–T–60), 2'' x 60 Yard Roll	⅔ yd.
**8135–890–9873	Pressure Sensitive Tape (PPP–T–60), 2'' x 60 Yard Roll	2¾ yd.
8135–985–7242	Paper, Volatile, Packaging (MIL–P–3420), 36'' x 100 Foot Roll	2½ ft.
9150–281–2007	Corrosion, Preventative Compound, Lubricating Oil, General Purpose (VV–L–800), 55 Gallon Drum.	1¼ oz.
9310–160–7858	Board, Stencil, UU–S–625 100 sh	(***).

*Material Requirements for 80 rifles.
**Material Requirements for 4 rifles.
***These items will be required in addition to the packaging materials listed above and will be used as needed.

Bill of Materials

Name	Qty req'd	Material	Dimensions	FSN
Ends	2	Plywood	45'' x 41¼'' x ¾''	5530–554–8709
Sides	2	Plywood	53'' x 41¼'' x ¾''	5530–554–8709
Top	1	Plywood	53'' x 46½'' x ¾''	5530–554–8709
Bottom	1	Plywood	53'' x 46½'' x ¾''	5530–554–8709
Cleats	4	Wood	1'' x 4'' x 41¼''	5510–220–6078
Cleats	4	Wood	1'' x 4'' x 37¾''	5510–220–6078
Skid	3	Wood	4'' x 4'' x 46½''	5510–220–6226

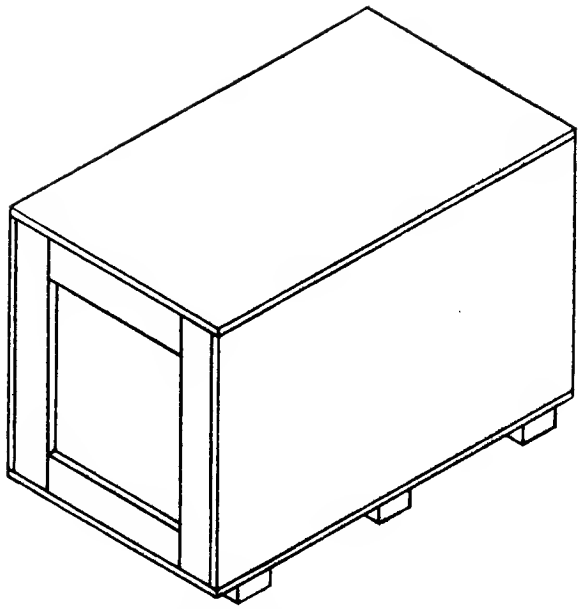

Figure A–7. Shipping Container.

APPENDIX A-8

PREPARATION INSTRUCTIONS FOR SHIPMENT: SURFACE VESSEL TRANSPORT

FSN	ITEM DESCRIPTION
☐ 1005-317-2474	Pistol, Automatic, Cal .22 High Standard Supermatic.

PRESERVED: _____ _____ _____
(Month) (Day) (Year)

PRESERVED FOR A MAXIMUM OF 180 DAYS

NOTE:

Function: Relates to instructions to be accomplished in preparation of the equipment for shipment.

Mech: For initials of mechanic or responsible processing personnel to indicate function has been completed.

Insp: For initials of inspector certifying that function has been completed as indicated by the mechanic or processing personnel.

Step	Function	Mech	Insp
	a. Unit Responsibility.		
1	Assure that weapon and equipment are in good operating condition.		
2	Certify that weapon, magazines, and containers are free of ammunition and explosives.		
3	As directed, weapon complete with tools and equipment, will be delivered to designated processing site.		
4	Unit Commander, or representative will remain with equipment until acceptance by responsible preservation site personnel.		
	b. Cleaning, Preservation, Packaging, Packing, and Marking.		
	WARNING		
	Before cleaning and packaging. BE SURE WEAPON IS CLEAR. Do not actuate trigger until weapon has been cleared. Inspect chamber to insure that it is empty and check to see that no ammunition is in position to be introduced. Avoid having live ammunition in vicinity of work area.		
1	Disassemble weapons as necessary to accomplish thorough cleaning.		
2	Clean barrel bore, chamber, and any parts having heavy contaminants with a metallic brush (1005-903-1296) saturated with solvent cleaning compound (MIL-C-372) (6850-753-4806). Use rod issued with weapon.		
3	Remove cleaner from bore using swab, small arms cleaning, size 2½″ x 2½″ (1005-288-3565).		
4	Further cleaning of all surfaces shall be accomplished by complete immersion, or, by wiping with rags (DDD-R-30) (7920-205-3570) saturated with solvent, dry cleaning (P-D-680) (6850-285-8012) accompanied by scrubbing and agitation.		
5	Position parts to allow complete drainage.		
6	Rinse parts in clean solvent, dry cleaning (P-D-680) (6850-285-8012), to remove residues.		
7	Drain and dry with compressed air, or, wipe with rags (DDD-R-30) (7920-205-3570).		
8	Cleaning of canvas, webbing, synthetic materials, and wood, shall be by any process, or combination of processes which will accomplish thorough cleaning without damage to the item(s). Clean by brushing, wiping, etc.		
9	Reassemble weapon.		
10	Metallic surfaces of weapons shall be coated with corrosion preventative compound, lubricating oil, general purpose (VV-L-800) (9150-281-2007).		

Step	Function	Mech	Insp
11	Drain excess oil from weapon, changing draining position as necessary to accomplish thorough drainage.		
12	Wrap pistol with a 16″ x 18″ piece of paper, volatile, packaging (MIL–P–3420) (8135–985–7242).		
13	Place each wrapped pistol in a 7″ x 15″ bag (MIL–B–131) (8135–282–0565).		
14	Disassemble rod, cleaning (1005–716–2231) prior to packaging.		
15	Clean rod by immersion in solvent, drycleaning (P–D–680) (6850–285–8012), accompanied by scrubbing or agitation.		
16	Completely drain weapon of cleaning solvent prior to preservative application.		
17	Rod, cleaning, shall be coated by dipping in corrosion preventative compound, lubricating oil, general purpose (VV–L–800) (9150–281–2007).		
18	Completely drain of excess preservative oil prior to wrapping.		
19	Wrap rod with a 4″ x 10″ piece of paper, volatile, packaging (MIL–P–3420) (8135–985–7242).		
20	Place wrapped rod, cleaning, in bag with pistol.		
21	Close bag by heat sealing.		
22	Place sealed bag in a corrugated fiberboard box (PPP–F–320) (8135–132–9067), 11½″ x 5½″ x 2¼″.		
23	Fill void space of box with cushioning material, cellulosic (PPP–C–843) (8135–855–6969), size 12″ x 12″ x ¾″.		
24	Seal the center seams of top and bottom pressure sensitive (PPP–T–60) (8135–890–9873), size 2″ x 51″.		
25	Apply the following marking on each unit container with ink, marking stencil, black TT–I–559, (7510–161–0811): 1005–317–2474 Pistol, Automatic, Cal .22 1 Each Preserved on (month-day-year) for a maximum of 180 days Gross Weight: 3.34 Cube: .107		
26	Assemble cleated plywood shipping container, size 36″ x 29¾″ x 21½″, in accordance with Figure A–8 using 8D nails (FF–N–105) (5315–010–6507), 6D nails (FF–N–105) (5315–161–8607) and 10D nails (FF–N–105) (5315–010–6509).		
27	Place 120 pistols w/rods, unit packaged as above, in a shipping container, Figure A–8.		
28	Close shipping container with 8D nails (FF–N–105) (5315–010–6507).		
29	Secure shipping container with steel strapping (QQ–S–781) (8135–283–0669) size ¾″ x 120″ long, 3 pieces required.		
30	Secure steel strapping with seals, ¾″ (8125–239–5293), 3 required.		
31	Apply the following marking on each shipping container with 1″ minimum size marking, using ink marking, stencil, black (TT–I–559) (7510–161–0811): 1005–317–2474 Pistol, Automatic, Cal. .22 120 Each Preserved on (month-day-year) for a maximum of 180 days Gross Weight: 507 Cube: 18.94		
32	Preparation instructions sheets shall be completed and placed in a waterproof envelope (MIL–B–131) (8135–282–0565), size 10″ x 12″ and secured to the item/container in a conspicuous location.		
	c. Deprocessing. Prior to placing this item in service, deprocessing action will be in reverse of checklist above.		

Table A–8. Packaging Materials List

FSN	Item description	Unit of use qty
1005–288–3565	Swab, Small Arms Cleaning, 2½″ x 2½″, 1,000 per Package	10 ea.
*1005–903–1296	Brush, Cleaning, Small Arms	1 ea.
**5315–010–6507	Nail, General Purpose (FF–N–105) 8D, 2⅜″ Lg., 50 Pounds per Carton	6 lb.
**5315–010–6509	Nail, General Purpose (FF–N–105), 10D, 2⅞″ Lg., 50 Pounds per Carton	⅛ lb.
**5315–161–8607	Nail, General Purpose (FF–N–105), 6D 1⅞″ Lg., 50 Pounds per Carton	½ lb.
**5510–220–6078	Lumber, Soft Wood (MM–L–751), 1″ x 4″	5 bf.
**5510–220–6214	Lumber, Soft Wood (MM–L–751), 3″ x 4″	5⅛ bf.
**5530–554–8709	Plywood, Soft Wood (NN–P–530), ¾″ x 48″ x 96″ Sheet	38 sf.
6850–285–8012	Solvent, Dry Cleaning (P–D–680), 55 Gallon Drum	1 pt.
6850–753–4806	Cleaning, Compound Solvent (MIL–C–372), 55 Gallon Drum	1 pt.
7510–161–0811	Ink, Marking, Stencil, Black (TT–I–559) 1 Gallon Can	(***)
7920–205–3570	Rag, Wiping (DDD–R–30), 50 Pound Bale	(***).
8135–132–9057	Fiberboard, Corrugated (PPP–F–320), 48″ x 96″ Sheet	¼ sf.
**8135–239–5293	Seal, Strapping, Closed Type W/O Ears, ¾″, 1.7812 x 0.8075 Wide, 5,000 per Box	3 ea.
8135–282–0565	Barrier Material, Water-Vaporproofed, Flexible (MIL–B–131), 36″ x 200 Yard Roll	¼ yd.
**8135–282–0565	Barrier Material, Water-Vaporproofed, Flexible (MIL–B–131), 36″ x 200 Yard Roll	⅓ yd.
**8135–283–0669	Strapping, Steel, Nailless, (QQ–S–781), ¾″ x 0.023″, 100 Pound Coil	30 ft.
8135–855–6969	Cushioning Material, Cellulosic (PPP–C–843), ¾″ x 24″ x 167 Feet Per Package	½ ft.
8135–890–9873	Pressure Sensitive Tape, (PPP–T–60) 2″ x 60 Yard Roll	¾ yd.
8135–985–7242	Paper, Volatile, Packaging (MIL–P–3420), 36″ x 100 Foot Roll	¾ ft.
9150–281–2007	Corrosion, Preventative Compound, Lubricating Oil, General Purpose (VV–L–800), 55 Gallon Drum.	1 pt.
9310–160–7858	Board, Stencil, UU–S–625 100 sh	(***).

*Material requirements for 20 pistols.
**Material requirement for 120 pistols.
***These items will be required in addition to the packaging materials listed above and will be used as needed.

Bill of Materials

Name	No. req'd	Material	Dimensions	FSN
End	2	Plywood	29¾″ x 21½″ x ¾″	5530–554–8709
Side	2	Plywood	39″ x 21½″ x ¾″	5530–554–8709
Top	1	Plywood	39″ x 31¼″ x ¾″	5530–554–8709
Bottom	1	Plywood	39″ x 31¼″ x ¾″	5530–554–8709
Vertical Cleat	4	Wood	1″ x 4″ x 21¼″	5510–220–6078
Horizontal Cleat	4	Wood	1″ x 4″ x 22½″	5510–220–6078
Skid	2	Wood	3″ x 4″ x 31¼″	5510–220–6214

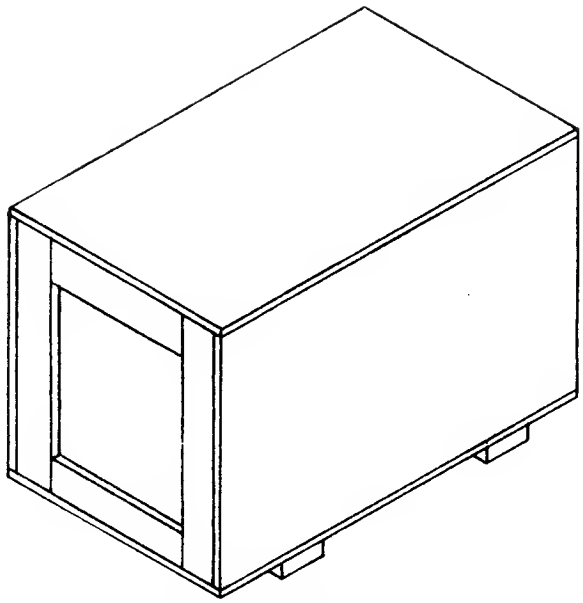

Figure A–8. Shipping container.

APPENDIX A-9

PREPARATION INSTRUCTIONS FOR SHIPMENT: SURFACE VESSEL TRANSPORT

FSN	ITEM DESCRIPTION
☐ 1005-322-9715	Machine Gun, Caliber .50 Browning M2, Heavy Barrel Flexible W/E.

PRESERVED: _____ (Month) _____ (Day) _____ (Year)

PRESERVED FOR A MAXIMUM OF 180 DAYS

NOTE:

Function: Relates to instructions to be accomplished in preparation of the equipment for shipment.

Mech: For initials of mechanic or responsible processing personnel to indicate function has been completed.

Insp: For initials of inspector certifying that function has been completed as indicated by the mechanic or processing personnel.

Step	Function	Mech	Insp
	a. Unit Responsibility.		
1	Assures that weapon and equipment are in good operating condition.		
2	Certify that weapon is free of ammunition in gun barrels, magazines and containers.		
3	Deliver complete weapon, with tools and equipment, to designated processing area.		
4	Unit commander, or representative, will remain with equipment until acceptance by responsible preservation site personnel.		
	b. Cleaning, Preservation, Packaging, Packing and Marking.		
	WARNING Before cleaning and packaging, BE SURE WEAPON IS CLEAR. Do not actuate trigger until weapon has been cleared. Inspect chamber to insure that it is empty and check to see that no ammunition is in position to be introduced. Avoid having live ammunition in vicinity of work area.		
1	Disassemble weapon and BII equipment as necessary to accomplish thorough cleaning.		
2	Clean all metallic surfaces by wiping with rags (DDD-R-30) (7920-205-3570) saturated with (MIL-C-372) (6850-753-4806) cleaning compound solvent.		
3	Clean both barrels, bore and chamber with swabs (1005-288-3565) using (MIL-C-372) (6850-753-4806).		
4	Clean all surfaces of machine gun having burned powder residue with a metallic bristle brush (1005-550-4037) saturated with rifle bore cleaner (MIL-C-372) (6850-753-4806). Use rod furnished as "special tools".		
5	After cleaning with (MIL-C-372) (6850-753-4806), rinse with a dry cleaning solvent (P-D-680) (6850-285-8012).		
6	Drain and dry with compressed air or wiping rags (DDD-R-30) (7920-205-3570) changing drying position as necessary to accomplish thorough drainage.		
7	Dry both barrel bores and chambers with swabs (1005-288-3565).		
8	All cleaned surfaces shall be thoroughly dried prior to preservation.		
9	Preserve all machine gun surfaces and both barrels with preservative oil (VV-L-800) (9150-281-2007).		
10	Completely drain off excess oil prior to reassembly and packaging.		

Step	Function	Mech	Insp
11	Disengaged gun barrel and the one with B11 equipment shall be packaged separate from machine gun.		
12	Insert a bore tube, volatile corrosion inhibitor (1005–336–0216) into each bore extending tube one inch beyond each barrel.		
13	Wrap each gun barrel in volatile packaging (MIL–P–3420) (8135–985–7242) individually, size 8″ x 48″ (2 pieces required).		
14	Secure wraps with (PPP–T–60) (8135–890–9873) 2″ x 5″ (8 pieces) (4 per gun barrel).		
15	The two wrapped gun barrels shall be individually cushioned with cellulosic material (PPP–C–843) (8135–855–6969) 8″ x 48″ (2 pieces required) and taped with (PPP–T–60) (8135–890–9873) 2″ x 10″ (10 pieces) (5 pieces to each gun).		
16	Locate each wrapped and cushioned gun barrel in a barrier material 10″ x 50″ (MIL–B–131) (8135–282–0565) (2 bags required).		
17	Heat seal each bag.		
18	Wrap machine gun in paper volatile packaging (MIL–P–3420) (8135–985–7242) size 36″ x 36″.		
19	Secure wrap with (PPP–T–60) (8135–890–9873) 2″ x 10″ (4 pieces).		
20	Cushion machine gun with cellulosic material (PPP–C–843) (8135–855–6969) 36″ x 36″.		
21	Secure with tape (PPP–T–60) (8135–890–9873) 2″ x 15″ (4 pieces).		
22	Locate wrapped and cushioned machine gun in bag (MIL–B–131) (8135–282–0565). Bag size 16″ x 50″.		
23	Heat seal bag.		
24	Basic issue item shall be preserved and packaged as specified. See Table A–9–2.		
25	All items packaged as indicated in Table A–9–2 shall be placed in the portable tool box, Item 13, Table A–9–2.		
26	Locate small items in top tray and the remainder of the items shall be positioned in bottom of tool box, Item 13, Table A–9–2.		
27	Cushion BII item in tool box with (PPP–C–843) (8135–855–6969). 16″ x 8″ (4 pieces required).		
28	Close tool box with hasps provided and also tape closed with tape (PPP–T–60) (8135–890–9873) 2″ x 24″.		
29	Locate packaged machine gun, portable tool box with B[illegible] equipment and two wrapped gun barrels in a fiberboard box, size 57″ x 9½″ x 11″ I.D. (PPP–F–320) (8135–132–9067).		
30	Cushioning material (MIL–C–7769) (8135–132–9568) (4 pieces) 8″ x 11″ shall be located in each end of the fiberboard container.		
31	Two (2) pieces (MIL–C–7769) (8135–132–9568) size 8″ x 53″ shall be located on bottom of container.		
32	Position portable tool box and wrapped machine gun on cushioning.		
33	Locate two (2) pieces (MIL–C–7769) (8135–132–9568) size 8″ x 53″ on top of tool box and machine gun.		
34	Locate the two wrapped gun barrels on cushioned tool box and machine gun.		
35	To prevent movement of gun barrels, machine gun and portable tool box, locate cushioning (MIL–C–7769) (8135–132–9568) 4 square feet required, evenly distributed around packaged parts.		
36	Close container with (PPP–T–60) tape (8135–890–9873) 2″ x 60″ (2 pieces).		
37	Band each machine gun container with barrel and BII equipment with 3 pieces of filament reinforced pressure sensitive tape, size 1″ x 42″ (3 pieces) required (PPP–T–97) (8135–582–4772), applied girth-wise at (3) places. Applied at equal distances.		

Step	Function	Mech	Insp
38	Apply the following information on each fiberboard container with stencil ink (TT-I-559) (7510-161-0811): 1005-322-9715 Machine Gun .50 Caliber H.B. Flex. W/E 1 Each Preserved on (month-day-year) for a maximum of 180 days Gross weight: 11.7 lbs Cube: 3.6		
39	Assemble exterior shipping container 57¾″ x 29″ x 34¾″ I.D. (see Figure A-9) with 8D nails (FF-N-105) (5315-010-6507) and apply skids with 10D nails (FF-N-105) (5315-010-6509).		
40	Pack nine (9) machine guns with BII in the assembled shipping container.		
41	Close container with 8D nails (FF-N-105) (5315-010-6507).		
42	Apply three (3) steel straps (QQ-S-781) (8135-283-0669), ¾″ x 144″.		
43	Secure strapping with seals, (8135-239-5293), (3 required).		
44	Apply the following marking in 1″ letters on cleated plywood box with stencil ink (TT-I-559) (7510-161-0811). 1005-322-9715 Machine Gun Cal. .50 H.B. Flex. W/E 9 Each Preserved on (month-day-year) for a maximum of 180 days Gross Weight: 1,208 Cube: 37		
45	Preparation instructions sheets shall be completed and placed in a waterproof envelope (MIL-B-131) (8135-282-0565), size 10″ x 12″ and secured to the item/container in a conspicuous location.		
	c. Deprocessing. Prior to placing this item in service, following receipt, deprocessing action will be in reverse of checklist above.		

Table A-9-1. Packaging Materials List

FSN	Item description	Unit of use qty
1005-288-3565	Swab, Small Arms, Cleaning, 2½″ x 2½″, 1,000 Per Package	10 ea.
1005-336-0216	Bore Tube, Volatile, Corrosion Inhibitor (MIL-P-3420)	2 ea.
1005-550-4037	Brush, Cleaning	1 ea.
*5315-010-6507	Nail, General Purpose (FF-N-105), 8D, 2⅜″ Long, 50 Pound Carton	1 lb.
*5315-010-6509	Nail, General Purpose (FF-N-105), 10D, 2⅞″ Long, 50 Pound Carton	⅛ lb.
*5510-220-6078	Lumber, Soft Wood (MM-L-751), 1″ x 4″	7 bf.
*5510-220-6194	Lumber, Soft Wood (MM-L-751), 2″ x 4″	5⅓ bf.
*5530-554-8709	Plywood, Soft Wood (NN-P-530), ¾″ x 48″ x 96″ Sheet	63 sf.
6850-285-8012	Solvent, Dry Cleaning (P-D-680), 55 Gallon Drum	1 pt.
6850-753-4806	Cleaning Compound Solvent (MIL-C-372), 55 Gallon Drum	1 pt.
7510-161-0811	Ink, Marking, Stencil, Black (TT-I-559), 1 Gallon Can	(**).
7920-205-3570	Rag, Wiping (DDD-R-30), 50 Pound Bale	(**).
8135-132-9067	Fiberboard, Corrugated (PPP-F-320), 48″ x 96″ Sheet	20 sf.
8135-132-9568	Cushioning, Bound Fiber (MIL-C-7769), 24″ x 72″ Sheet	9⅛ ft.
*8135-239-5293	Seal, Strapping, Closed Type W/O Ears, ¾″, 1.7812, 0.8075 Wide, 5,000 Per Box	3 ea.
8135-282-0565	Barrier Material, Water-Vaporproofed, Flexible (MIL-B-131), 36″ x 200 Yard Roll	4½ yd.
*8135-282-0565	Barrier Material, Water-Vaporproofed, Flexible (MIL-B-131), 36″ x 200 Yard Roll	⅓ yd.
*8135-283-0669	Strapping, Steel, Nailless (QQ-S-781), ¾″ x 0.023″, 100 Pound Coil	36 ft.
8135-582-4772	Filament Reinforced, Pressure Sensitive Tape (PPP-T-97), 1″ x 60 Yard Roll	3½ yd.
8135-855-6969	Cushioning Material, Cellulosic (PPP-C-843), ¾″ x 24″ x 167 Foot Package	8¼ ft.
8135-890-9873	Pressure Sensitive Tape (PPP-T-60), 2″ x 60 Yard Roll	10¾ yd.

See footnotes at end of table.

Table A-9-1. Packaging Materials List—Continued

FSN	Item description	Unit of use qty
8135-985-7242	Paper, Volatile, Packaging (MIL-P-3420), 36" x 100 Foot Roll	5¼ ft.
9150-281-2007	Corrosion Preventative Compound, Lubricating Oil, General Purpose (VV-L-800), 55 Gallon Drum.	1 pt.
9310-160-7858	Board, Stencil (UU-S-625), 100 Sheets	(**).

*Material requirements for 9 machine guns.
**These items will be required in addition to the packaging materials listed above and will be used as needed.

Table A-9-2. Preservation for Basic Issue Items

Item No.	Item description	Qty req'd	Cleaning	Drying	Preservative	Container	Container size	Container class	Mech	Insp
1	Brush Chamber	1	C-1		None		4 x 8	E		
2	Brush Firing, Pin Hole	1	C-1		None	Bag	2½ x 8	E		
3	Brush Bore	4	C-1		None	Bag	4 x 6	E		
4	Case Accessories	1	C-1		None	Bag	6 x 8	E		
5	Cover Barrel	1	C-1		None	Bag	6 x 16	E		
6	Envelope Spare Parts	1	C-1		None	Bag	6 x 10	E		
7	Extractor	1	C-1		P-9	Bag	2½ x 6	E		
8	Flashhider	1	C-1		P-9	Bag	5½ x 11	E		
9	Gage	1	C-1		P-9	Bag	3 x 5	E		
10	Rod Cleaning	1	C-1		P-9	Bag	2½ x 10	E		
11	Rod Cleaning, 4 Sections	Set	C-1		P-9	Bag	6 x 15	E		
12	Swab Holder	1	C-1		P-9	Bag	2½ x 5	E		
13	Tool Box, Portable	1	C-1		None					
14	TM Manual	1	C-1		None	Bag	6 x 8	E		

EXPLANATION OF CODES

C-1 Any applicable method not injurious to the item. Normally accomplished by wiping with a dry rag (DDD-R-30) (7920-205-3570).

C-3 Wipe or scrub items with a rag (DDD-R-30) (7920-205-3570) saturated with dry-cleaning solvent (P-D-680) (6850-285-8012), or dip in solvent and brush clean.

D-1 Wipe with clean rag (DDD-R-30) (7920-205-3570) to insure removal of solvent.

P-9 Apply a light coat of corrosion preventative compound, lubricating oil, general purpose (VV-L-800) (9150-281-2007) by dipping or brushing.

P-18 Wrap item with paper volatile corrosion inhibitor (MIL-P-3420) (8135-985-7242). Place dull side of material to the inside and foil side to outside.

P-19 Apply a light coat of corrosion preventive compound (MIL-C-16173) (8030-526-1604) by dipping or brushing. Allow to dry before handling.

NOTE

CONTAINERS:

E-Bag—Fabricated from (MIL-B-131) (8135-282-0565).
Box—Fabricated from (PPP-F-320) (8135-132-9067).
Bag closure—Heat Seal.
Box closure—RSC Cartons: Seal the center seams of top and bottom with tape (PPP-T-60) (8135-890-9873).
OPF Cartons: Seal the top center seam with tape (PPP-T-60) (8135-890-9873).

Bill of Materials

Name	No. req'd	Material	Dimensions	FSN
Horizontal Cleat	4	Wood	1" x 4" x 34¾"	5510-220-6078
Vertical Cleat	4	Wood	1" x 4" x 27½"	5510-220-6078
Ends	2	Plywood	29" x 34¾" x ¾"	5530-554-8709
Sides	2	Plywood	60¾" x 34¾" x ¾"	5530-554-8709
Top	1	Plywood	60¾" x 30½" x ¾"	5530-554-8709
Bottom	1	Plywood	60¾" x 30½" x ¾"	5530-554-8709
Skids	3	Wood	2" x 4" x 30½"	5510-220-6194

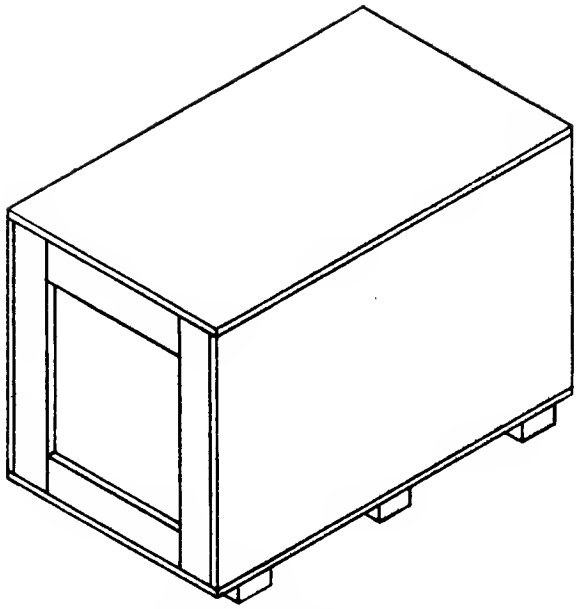

Figure A–9. Shipping Container.

APPENDIX A–10

PREPARATION INSTRUCTIONS FOR SHIPMENT: SURFACE VESSEL TRANSPORT

FSN	ITEM DESCRIPTION
☐ 1005–322–9716	Mount, Tripod, Machine Gun: Cal. .50, M3, W/E.

PRESERVED: _____ _____ _____
(Month) (Day) (Year)

PRESERVED FOR A MAXIMUM OF 180 DAYS

NOTE:

Function: Relates to instructions to be accomplished in preparation of the equipment for shipment.

Mech: For initials of mechanic or responsible processing personnel to indicate function has been completed.

Insp: For initials of inspector certifying that function has been completed as indicated by the mechanic or processing personnel.

Step	Function	Mech	Insp
	a. Unit Responsibility.		
1	Assure that Mount, Tripod is in operating condition.		
2	Deliver Mount, Tripod to designated processing site.		
3	Unit Commanders, or representative, will remain with Mount, Tripod until acceptance by responsible preservation site personnel.		
	b. Cleaning, Preservation, Packaging, Packing and Marking.		
1	Disassemble Mount, Tripod as necessary in preparation for cleaning.		
2	Clean exterior surfaces of metal parts, with cleaning rags (DDD–R–30) (7920–205–3570) saturated with solvent, cleaning compound (MIL–C–372) (6850–753–4806).		
3	Further cleaning of metal parts shall be accomplished by complete immersion in drycleaning solvent (P–D–680) (6850–285–8012) accompanied by scrubbing and agitation, or with a solvent saturated cleaning rag (DDD–R–30) (7920–205–3570).		
4	Rinse parts with clean drycleaning solvent (P–D–680) (6850–285–8012).		
5	Drain and dry cleaned parts with dry compressed air or with wiping rags (DDD–R–30) (7920–205–3570). All cleaned parts shall be dried prior to preservative application.		
6	Apply general purpose lubricating oil (VV–L–800) (9150–281–2007) to all metallic surfaces by any applicable procedure. Excess oil shall be drained prior to packaging.		
7	Reassemble Mount, Tripod with the exception of the pintle assembly and the elevating mechanism.		
8	Fold the mount in a position to obtain the minimum cube.		
9	Wrap mount with a piece of volatile paper (MIL–P–3420) (8135–985–7242) 24″ x 70″.		
10	Overwrap mount with cushioning material (PPP–C–843) (8135–855–6969) 24″ x 70″.		
11	Secure cushioning material with pressure sensitive tape (PPP–T–60) (8135–890–9873) 2″ x 6″ (4 pieces required).		
12	Wrap pintle assembly with a piece of volatile paper (MIL–P–3420) (8135–985–7242), 8″ x 12″.		
13	Overwrap pintle assembly with cushioning material (PPP–C–843) (8135–855–6969), 8″ x 12″.		
14	Secure cushioning material with pressure sensitive tape (PPP–T–60) (8135–890–9873) 2″ x 6″ (3 pieces required).		
15	Wrap elevating mechanism with a piece of volatile paper (MIL–P–3420) (8135–985–7242), 12″ x 12″.		

Step	Function	Mech	Insp
16	Overwrap elevating mechanism with cushioning material (PPP–C–843) (8135–855–6969) 12″ x 12″.		
17	Secure cushioning material with pressure sensitive tape (PPP–T–60) (8135–890–9873), 2″ x 6″ (3 pieces required).		
18	Place cushioned mount, pintle assembly and elevating mechanism in a corrugated fiberboard box (PPP–F–320) (8135–132–9067), 47½″ x 10″ x 6″.		
19	Fold Cover, Mount, Tripod and place on top of cushioned items.		
20	Close box and seal all seams and joints with pressure sensitive tape (PPP–T–60) (8135–890–9873) 2″ x 170″.		
21	The following markings shall be applied to each unit container with ink, marking, stencil, black (TT–I–559) (7510–161–0811): 1005–322–9716 Mount, Tripod, Machine Gun: Cal. .50, M3, W/E 1 Each Preserved on (month-day-year) for a maximum of 180 days Gross Weight: 57.00 Cube: 1.793		
22	Assemble shipping container, 48¼″ x 33″ x 32″ (see Figure A–10) utilizing 6D nails (FF–N–105) (5315–161–8607), 8D nails (FF–N–105) (5315–01–6507) and 16D nails (FF–N–105) (5315–010–6511).		
23	Pack 15 Mount, Tripod boxes, as unit packaged above, in assembled shipping container.		
24	Secure lid with 8D nails (FF–N–105) (5315–010–6507).		
25	Apply three (3) steel straps (QQ–S–781) (8135–283–0669) ¾″ x 142″ (3 required).		
26	Secure strapping with seals (8135–239–5293) (3 required).		
27	The following markings shall be applied to each shipping container with minimum size 1″ letters using ink, marking, stencil, black (TT–I–559) (751–161–0811): 1005–322–9716 Mount, Tripod, Machine Gun: Cal. .50, M3 W/E 15 Each Preserved on (month-day-year) for a maximum of 180 days Gross Weight: 1,000.00 Cube: 37.987		
28	Preparation instructions sheets shall be completed and placed in a waterproof envelope (MIL–B–131) (8135–282–0565), size 10″ x 12″ and secured to the item/container in a conspicuous location.		
	c. Deprocessing. Prior to placing this item in service, following receipt, deprocessing action, in reverse of checklist must be completed.		

Table A–10. Packaging Materials List.

FSN	Item description	Unit of use qty
*5315–010–6507	Nail, General Purpose (FF–N–105), 8D, 2⅜″ Long, 50 Pound Carton	⅔ lb.
*5315–010–6511	Nail, General Purpose (FF–N–105), 16D, 3¼″ Long, 50 Pound Carton	½ lb.
*5315–161–8607	Nail, General Purpose (FF–N–105), 6D, 1⅞″ Long, 50 Pound Carton	¼ lb.
*5510–220–6078	Lumber, Soft Wood, (MM–L–751) 1″ x 4″	6 bf.
*5510–220–6226	Lumber, Soft Wood (MM–L–751) 4″ x 4″	11 bf.
*5530–554–8709	Plywood, Soft Wood (NN–P–530) ¾″ x 48″ x 96″ Sheet	62 sf.
6850–285–8012	Solvent, Drycleaning (P–D–680) 55 Gallon Drum	1 pt.
6850–753–4806	Cleaning Compound Solvent (MIL–C–372) 55 Gallon Drum	1 pt.
7510–161–0811	Ink, Marking, Stencil, Black (TT–I–559) 1 Gallon Can	(**).
7920–205–3570	Rag, Wiping (DDD–R–30) 50 Pound Bale	(**).

See footnotes at end of table.

Table A-10. Packaging Materials List.—Continued

FSN	Item description	Unit of use qty
8135-132-9067	Fiberboard, Corrugated (PPP-F-320) 48″ x 96″ Sheet	13½ sf.
*8135-239-5293	Seal, Strapping, Closed Type W/O Ears, ¾″, 1.7812 x 0.8075 Wide 5,000 Per Box	3 ea.
*8135-282-0565	Barrier Material, Water-Vaporproofed Flexible (MIL-B-131) 36″ x 200Y ard Roll	⅓ yd.
*8135-283-0669	Strapping, Steel, Nailless (QQ-S-781), ¾″ x 0.023″, 100 Pound Coil	35½ ft.
8135-855-6969	Cushioning Material, Cellulosic (PPP-C-843), ¾″ x 24″ x 167 Foot Per Package	6⅔ ft.
8135-890-9873	Pressure Sensitive Tape (PPP-T-60) 2″ x 60 Yard Roll	6⅓ yd.
8135-985-7242	Paper, Volatile, Packaging (MIL-P-3420) 36″ x 100 Foot Roll	4½ Ft.
9150-281-2007	Corrosion, Preventative Compound, Lubricating Oil, General Purpose (VV-L-800) 55 Gallon Drum.	1 pt.
9310-160-7858	Board, Stencil, UU-S-625, 100 sh	(**).

*Material requirements for 15 Mount, Tripods.
**These items will be required in addition to the packaging materials listed above and will be used as needed.

Bill of Materials

Name	No. req'd	Material	Dimensions	FSN
Ends	2	Plywood	33″ x 32″ x ¾″	5530-554-8709
Sides	2	Plywood	51¼″ x 32″ x ¾″	5530-554-8709
Top	1	Plywood	51¼″ x 34½″ x ¾″	5530-554-8709
Bottom	1	Plywood	51¼″ x 34½″ x ¾″	5530-554-8709
Skids	3	Wood	4″ x 4″ x 34½	5510-220-6226
Cleats	4	Wood	1″ x 4″ x 31¾″	5510-220-6078
Cleats	4	Wood	1″ x 4″ x 25¾″	5510-220-6078

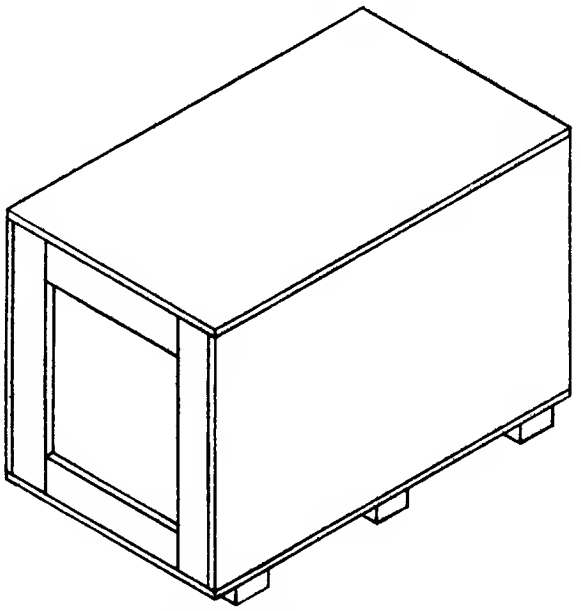

Figure A-10. Shipping Container.

APPENDIX A–11

PREPARATION INSTRUCTIONS FOR SHIPMENT: SURFACE VESSEL TRANSPORT

FSN	ITEM DESCRIPTION
☐ 1005–322–9718	Mount, Tripod, Machine Gun: Cal .30, M2 W/E.
☐ 1005–710–5599	Mount, Tripod, Machine Gun: M122.

PRESERVED: _____ (Month) _____ (Day) _____ (Year)

PRESERVED FOR A MAXIMUM OF 180 DAYS

NOTE:

Function: Relates to instructions to be accomplished in preparation of the equipment for shipment.

Mech: For initials of mechanic or responsible processing personnel to indicate function has been completed.

Insp: For initials of inspector certifying that function has been completed as indicated by the mechanic or processing personnel.

Step	Function	Mech	Insp
	a. Unit Responsibility.		
1	Assure that Mount, Tripod is in operating condition.		
2	Deliver Mount, Tripod to designated processing site.		
3	Unit commanders or representative will remain with Mount, Tripods until acceptance by responsible preservation site personnel.		
	b. Cleaning, Preservation, Packaging, Packing, and Marking.		
1	Disassemble Mount, Tripod as necessary in preparation for cleaning.		
2	Clean exterior surfaces of metal parts with cleaning rags (DDD–R–30) (7920–205–3570) saturated with solvent cleaning compound (MIL–C–372) (6850–753–4806).		
3	Further cleaning of metal parts shall be accomplished by complete immersion in dry cleaning solvent (P–D–680) (6850–285–8012), accompanied by scrubbing and agitation or with a solvent saturated cleaning rag (DDD–R–30) (7920–205–3570).		
4	Rinse parts with clean dry cleaning solvent (P–D–680) (6850–285–8012).		
5	Drain and dry cleaned parts with dry compressed air or with wiping rags (DDD–R–30) (7920–205–3570). All cleaned parts shall be dried prior to preservation application.		
6	Apply general purpose lubricating oil (VV–L–800) (9150–281–2007), to all metallic surfaces by any applicable procedure. Excess oil shall be drained prior to packaging.		
7	Reassemble Mount, Tripod with the exception of the pintle assembly, traverse and elevating mechanism and adapter assembly.		
8	Fold the mount in a position to obtain the minimum cube.		
9	Wrap mount with a piece of volatile paper (MIL–P–3420) (8135–985–7242), 18″ x 40″.		
10	Overwrap mount with cushioning material (PPP–C–843) (8135–855–6969), 18″ x 40″.		
11	Secure cushioning material with pressure sensitive tape (PPP–T–60) (8135–890–9873), 2″ x 6″ (3 pieces required).		
12	Wrap pintle assembly with a piece of volatile paper (MIL–P–3420) (8135–985–7242), 12″ x 12″.		
13	Overwrap pintle assembly with cushioning material (PPP–C–843) (8135–855–6969), 12″ x 12″.		

Step	Function	Mech	Insp
14	Secure cushioning material with pressure sensitive tape (PPP–T–60) (8135–890–9873), 2″ x 6″ (3 pieces required).		
15	Wrap traverse and elevating mechanism with a piece of volatile paper (MIL–P–3420) (8135–985–7242), 12″ x 14″.		
16	Overwrap traverse and elevating mechanism with cushioning material (PPP–C–843) (8135–855–6969), 12″ x 14″.		
17	Secure cushioning material with pressure sensitive tape (PPP–T–60) (8135–890–9873) 2″ x 6″ (3 pieces required).		
18	Wrap Adapter Assembly with pin and rings attached with a piece of volatile paper (MIL–P–3420) (8135–985–7242) 9″ x 12″.		
19	Overwrap Adapter Assembly with pin and rings attached with cushioning material (PPP–C–843) (8135–855–6969) 9″ x 12″.		
20	Secure cushioning material with pressure sensitive tape (PPP–T–60) (8135–890–9873) 2″ x 6″ (3 pieces required).		
21	Place cushioned mount, pintle assembly, traverse and elevating mechanism and adapter assembly in a corrugated fiberboard box (PPP–F–320) (8135–132–9067) 31⅛″ x 7⅛″ x 5⅛″.		
22	Place Cover, mount tripod when applicable on top of cushioned items.		
23	Close box and seal the center seams of top and bottom pressure sensitive tape (PPP–T–60) (8135–890–9873) 2″ x 120″.		
24	The following markings shall be applied to each unit container with ink, marking, stencil, black (TT–I–559) (7510–161–0811) using weight specified below for each FSN: Federal stock number Item description 1 Each Preserved on (month-day-year) for a maximum of 180 days Gross Weight: Cube: .834 FSN: *Wt* 1005–322–9718 ..... 17.50 1005–710–5599 ..... 20.00		
25	Assemble shipping container, 46½″ x 32″ x 30″ (see fig. A–11) utilizing 6D (FF–N–105) (5315–161–8607), 8D (FF–N–105) (5315–010–6507), and 16D (FF–N–105) (5315–010–6511) nails.		
26	Pack 30 mount, tripod boxes as unit packaged above in assembled shipping container, 46½″ x 32″ x 30″.		
27	Secure lid with 8D nails (FF–N–105) (5315–010–6507)		
28	Apply three steel straps (QQ–S–781) (8135–283–0669) ¾″ x 154″ (3 required).		
29	Secure strapping with seals, ¾″ (8135–239–5293).		
30	The following marking shall be applied to each shipping container with minimum size 1″ letters, using ink, marking, stencil, black (TT–I–559) (7510–161–0811), using weight specified below for each Federal Stock Number: Federal Stock Number Item description 30 Each Preserved on (month-day-year) for a maximum of 180 days Gross Weight: Cube: 34.062 FSN: *Wt* 1005–322–9718 ..... 677.00 1005–710–5599 ..... 712.00		

Step	Function	Mech	Insp
31	Preparation instructions sheets shall be completed and placed in a waterproof envelope (MIL–B–131) (8135–282–0565), 10″ x 12″ and secured to the item/container in a conspicuous location.		
	c. Deprocessing. Prior to placing this item in service, following receipt, deprocessing action, in reverse, of checklist, must be completed.		

Table A–11. Packaging Materials List

FSN	Item description	Unit of use qty.
*5315–010–6507	Nail, General Purpose (FF–N–105), 8D, 2⅜″ long, 50 Pound Carton	⅔ lb.
*5315–010–6511	Nail, General Purpose (FF–N–105) 16D, 3¼″ long, 50 Pound Carton	½ lb.
*5315–161–8607	Nail, General Purpose (FF–N–105) 6D, 1⅞″ long, 50 Pound Carton	¼ lb.
*5510–220–6078	Lumber, Soft Wood (MM–L–751), 1″ x 4″	6 bf.
*5510–220–6226	Lumber, Soft Wood (MM–L–751), 4″ x 4″	11½ bf.
*5530–554–8709	Plywood, Soft Wood (NN–P–530), ¾″ x 48″ x 96″ Sheet	57 sf.
6850–285–8012	Solvent, Dry Cleaning (P–D–680) 55 Gallon Drum	½ pt.
6850–753–4806	Cleaning Compound Solvent (MIL–C–372) 55 Gallon Drum	½ pt.
7510–161–0811	Ink, Marking, Stencil, Black (TT–I–559), 1 Gallon Can	(**).
7920–205–3570	Rag, Wiping (DDD–R–30) 50 Pound Bale	(**).
8135–132–9067	Fiberboard, Corrugated (PPP–F–320), 48″ x 96″ Sheet	7 sf.
*8135–239–5293	Seal, Strapping, Closed Type W/O Ears, ¾″, 1.7812 x 0.8075 Wide	3 ea.
*8135–282–0565	Barrier Material, Water-Vaporproofed, Flexible (MIL–B–131), 36″ x 200 Yard Roll	⅓ yd.
*8135–283–0669	Strapping, Steel, Nailless (QQ–S–781), ¾″ x 0.023″, 100 Pound Coil	38½ ft.
8135–855–6969	Cushioning Material, Cellulosic (PPP–C–843), ¾″ x 24″ x 167 Foot Package	1½ ft.
8135–890–9873	Pressure Sensitive Tape (PPP–T–60), 2″ x 60 Yard Roll	4⅛ yd.
8135–985–7242	Paper, Volatile, Packaging (MIL–P–3420), 36″ x 100 Foot Roll	2½ ft.
9150–281–2007	Corrosion, Preventative Compound, Lubricating oil, General Purpose, (VV–L–800), 55 Gallon Drum.	½ pt.
9310–160–7858	Board, Stencil, UU–S–625 100 sh	(**).

*Material requirements for 30 Mount, Tripod.
**These items will be required in addition to the packaging materials listed above and will be used as needed.

Bill of Materials

FSN	Item description				Unit of use qty.
	Name	Qty req'd	Material	Dimensions	FSN
	Ends	2	Plywood	32″ x 30″ x ¾″	5530–554–8709
	Sides	2	Plywood	49½″ x 30″ x ¾″	5530–554–8709
	Top	1	Plywood	49½″ x 33½″ x ¾″	5530–554–8709
	Bottom	1	Plywood	49½″ x 33½″ x ¾″	5530–554–8709
	Skids	3	Wood	4″ x 4″ x 33½″	5510–220–6226
	Cleats	4	Wood	1″ x 4″ x 29¾″	5510–220–6078
	Cleats	4	Wood	1″ x 4″ x 24¾″	5510–220–6078

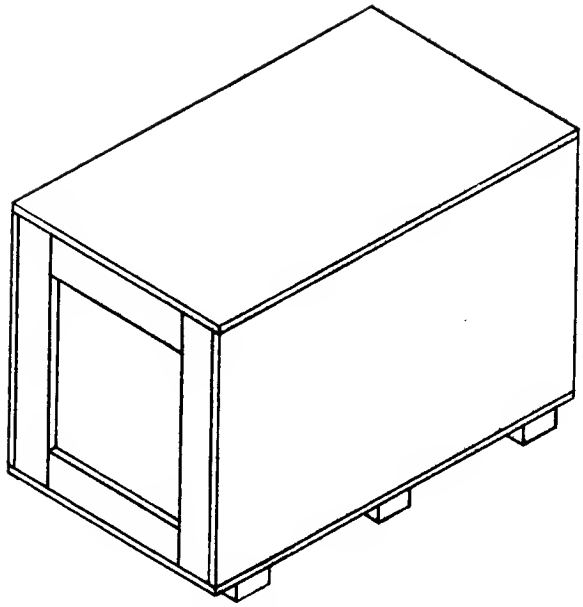

Figure A-11. Shipping Container.

APPENDIX A–12

PREPARATION INSTRUCTIONS FOR SHIPMENT: SURFACE VESSEL TRANSPORT

FSN	ITEM DESCRIPTION
☐ 1005–322–9736	Rifle, Caliber .30–06, Winchester, Model 70.

PRESERVED: _____ (Month) _____ (Day) _____ (Year)

PRESERVED FOR A MAXIMUM OF 180 DAYS

NOTE:

Function: Relates to instructions to be accomplished in preparation of the equipment for shipment.

Mech: For initials of mechanic or responsible processing personnel to indicate function has been completed.

Insp: For initials of inspector certifying that function has been completed as indicated by the mechanic or processing personnel.

Step	Function	Mech	Insp
	a. Unit Responsibility.		
1	Assure that weapon is in operating condition prior to movement to processing site.		
2	Certify that weapon and containers are free of ammunition.		
3	Deliver weapon, complete with tools and equipment, to designated processing site.		
4	Unit Commander, or representative, will remain with weapons until acceptance by responsible preservation site personnel.		
	b. Cleaning, Preservation, Packaging, Packing and Marking.		
	WARNING Before cleaning and packaging, BE SURE WEAPON IS CLEAR. Do not actuate trigger until weapon has been cleared. Inspect chamber to insure that it is empty and check to see that no ammunition is in position to be introduced. Avoid having live ammunition in vicinity of work area.		
1	Disassemble weapon, as necessary, to accomplish thorough cleaning.		
2	Clean exterior surfaces of metal parts with cleaning rags (DDD–R–30) (7920–205–3570) saturated with solvent cleaning compound (MIL–C–372) (6050–753–4806).		
3	Clean barrel bore, chamber and heavy contaminants of exterior metal with snug fitting bristle brush (1005–556–4174) and swabs (1005–288–3565), saturated with solvent cleaning compound (MIL–C–372) (6850–753–4806). Use rod furnished as "special tools".		
4	Further cleaning of metal parts shall be accomplished by complete immersion in dry-cleaning solvent (P–D–680) (6850–285–8012) accompanied by scrubbing and agitation or with a solvent-saturated cleaning rag (DDD–R–30) (7920–205–3570).		
5	Rinse metal parts with clean dry-cleaning solvent (P–D–680) (6850–285–8012).		
6	Drain and dry cleaned parts with dry, compressed air or with wiping rags (DDD–R–30) (7920–205–3570). The barrel bore and chamber shall be thoroughly dried prior to preservative application.		
7	Apply general purpose lubricating oil (VV–L–800) (9150–281–2007), to all metallic surfaces by any applicable procedure. Excess oil shall be drained prior to packaging.		
8	Reassemble weapon.		
9	Insert a VCI treated bore tube (1005-336-0225) into bore of barrel bending protruding portion over the muzzle end.		

Step	Function	Mech	Insp
10	Fold sling and wrap with a piece of volatile paper (MIL–P–3420) (8135–985–7242), 8″ x 12″.		
11	Wrap weapon with a piece of volatile paper (MIL–P–3420) (8135–985–7242), 18″ x 50″.		
12	Insert weapon and sling in a barrier bag (MIL–B–131) (8135–282–0565), 12″ x 50″.		
13	Close bag by heat sealing.		
14	Wrap each bagged weapon with cushioning material (PPP–C–843) (8135–855–6969), 18″ x 50″.		
15	Secure cushioning with pressure sensitive tape (PPP–T–60) (8135–890–9873), 2″ x 6″ (4 pieces required).		
16	Position four (4) bag cushioned weapons alternately in a corrugated fiberboard box (PPP–F–320) (8135–132–9067), 47½″ x 19½″ x 3½″.		
17	Cover weapons with cushioning material (PPP–C–843) (8135–855–6969), 20″ x 46″.		
18	Close and seal container with pressure sensitive tape (PPP–T–60) (8135–890–9873) 2″ x 50″ (2 pieces required).		
19	The following markings shall be applied to each unit container with ink, marking, stencil, black (TT–I–559) (7510–161–0811). 1005–322–9736 Rifle, Caliber .30–06, Winchester, Model 70 4 Each Preserved on (month-day-year) for a maximum of 180 days Gross Weight: 44.00 Cube: 2.204		
20	Assemble a shipping container, 48″ x 40″ x 40″ (see Figure A–12), utilizing 8D nails (FF–N–105) (5315–010–6507); 16D nails (FF–N–105) (5315–010–6511), and 6D nails (FF–N–105) (5315–161–8607).		
21	Pack eighty (80) rifle containers, unit packaged as above, in shipping container.		
22	Secure lid with 8D nails (FF–N–105) (5315–010–6507).		
23	Apply steel strapping (QQ–S–781) (8135–283–0669), ¾″ x 180″ (3 pieces required).		
24	Secure steel strapping with seals (8135–239–5293) (3 pieces required).		
25	The following marking shall be applied to each shipping container with minimum size 1″ letters, using ink, marking, stencil, black (TT–I–559) (7510–161–0811). 1005–322–9736 Rifle, Caliber .30–06, Winchester, Model 70 80 Each Preserved on (month-day-year) for a maximum of 180 days Gross Weight: 1000.00 Cube: 54.470		
27	Preparation instructions sheets shall be completed and placed in a waterproof envelope (MIL–B–131) (8135–282–0565), size 10″ x 12″ and secured to the item/container in a conspicuous location.		
	c. Deprocessing. Prior to placing the item in service following receipt, deprocessing action in reverse of checklist above, must be completed.		

Table A–12. Packaging Materials List

FSN	Item description	Unit of use qty
1005–288–3565	Swab, Small Arms Cleaning, 2½″ x 2½″, 1,000 Per Package	1 ea.
1005–336–0225	Bore Tube, VCI Treated, .19 O.D. x 28½″	1 ea.
*1005–556–4174	Brush, Cleaning, Small Arms: Bore	1 ea.
*5315–010–6507	Nail, General Purpose (FF–N–105), 8D, 2⅜″ long, 50 Pound Carton	1 lb.
*5315–010–6511	Nail, General Purpose (FF–N–105), 16D, 3¼″ Long, 50 Pound Carton	½ lb.
*5315–161–8607	Nail, General Purpose (FF–N–105), 6D, 1⅞″ Long, 50 Pound Carton	½ lb.
*5510–220–6078	Lumber, Soft Wood (MM–L–751), 1″ x 4″	8 bf.
*5510–220–6226	Lumber, Soft Wood (MM–L–751), 4″ x 4″	15 bf.
*5530–554–8709	Plywood, Soft Wood (NN–P–530), ¾″ x 48″ x 96″ Sheet	80 sf.
6850–285–8012	Solvent, Dry Cleaning (P–D–680) 55 Gallon Drum	1 pt.
6850–753–4806	Cleaning Compound Solvent (MIL–C–372), 55 Gallon Drum	1 pt.
7510–161–0811	Ink, Marking, Stencil, Black (TT–I–559), 1 Gallon Can	(***).
7920–205–3570	Rag, Wiping (DDD–R–30), 50 Pound Bale	(***).
**8135–132–9067	Fiberboard, Corrugated (PPP–F–320), 48″ x 96″ Sheet	22 sf.
*8135–239–5293	Seal, Strapping, Closed Type W/O Ears, ¾″, 1/7812 x 0.8075 Wide, 5,000 Per Box	3 ea.
8135–282–0565	Barrier Material, Water-Vaporproofed, Flexible (MIL–B–131), 36″ x 200 Yard Roll	1¼ yd.
*8135–282–0565	Barrier Material, Water-Vaporproofed, Flexible (MIL–B–131), 36″ x 200 Yard Roll	⅓ yd.
*8135–283–0669	Strapping, Steel, Nailless, ¾″ x 0.023″, 100 Pound Coil	45 ft.
8135–855–6969	Cushioning Material, Cellulosic (PPP–C–843), ¾″ x 24″ x 167 Feet Per Package	3⅛ ft.
**8135–855–6969	Cushioning Material, Cellulosic (PPP–C–843), ¾″ x 24″ x 167 Feet Per Package	3¼ ft.
8135–890–9873	Tape, Pressure Sensitive (PPP–T–60), 2″ x 60 Yard Roll	¾ yd.
**8135–890–9873	Pressure Sensitive Tape (PPP–T–60), 2″ x 60 Yard Roll	2¾ yd.
8135–985–7242	Paper, Volatile, Packaging (MIL–P–3420) 36″ x 100 Foot Roll	2⅓ ft.
9150–281–2007	Corrosion, Preventative Compound, Lubricating Oil, General Purpose (VV–L–800) 55 Gallon Drum.	1¾ oz.
9310–160–7858	Board, Stencil, UU–S–625 100 sh	(***).

*Material requirements; for 80 rifles.
**Material requirements for 4 rifles.
***These items will be required in addition to the packaging materials listed above and will be used as needed.

Bill of Materials

Name	Qty req'd	Material	Dimensions	FSN
Ends	2	Plywood	40″ x 40″ x ¾″	5530–554–8709
Sides	2	Plywood	51″ x 40″ x ¾″	5530–554–8709
Top	1	Plywood	51″ x 41½″ x ¾″	5530–554–8709
Bottom	1	Plywood	51″ x 41½″ x ¾″	5530–554–8709
Cleat	4	Wood	1″ x 4″ x 39¾″	5510–220–6078
Cleat	4	Wood	1″ x 4″ x 34⅛″	5510–220–6078
Skid	3	Wood	4″ x 4″ x 41½″	5510–220–6226

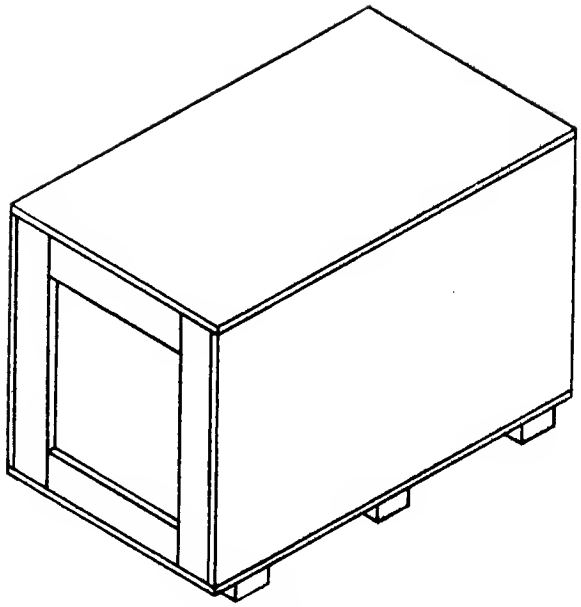

Figure A-12. Shipping Containers.

APPENDIX A–13

PREPARATION INSTRUCTIONS FOR SHIPMENT: SURFACE VESSEL TRANSPORT

	FSN	ITEM DESCRIPTION
☐	1005–345–6124	Pistol, Cal. .45, M1911A1 MM, W/E.
☐	1005–738–3026	Pistol, Cal. .45, M1911A1, W/E.

PRESERVED: _____ (Month) _____ (Day) _____ (Year)

PRESERVED FOR A MAXIMUM OF 180 DAYS

NOTE:

Function: Relates to instructions to be accomplished in preparation of the equipment for shipment.

Mech: For initials of mechanic or responsible processing personnel to indicate function has been completed.

Insp: For initials of inspector certifying that function has been completed as indicated by the mechanic or processing personnel.

Step	Function	Mech	Insp
	a. Unit Responsibility.		
1	Assure that weapon is in good operating condition.		
2	Certify that weapon, magazines, and containers are free of ammunition and explosives.		
3	As directed, weapon, complete with tools and equipment will be delivered to designated processing site.		
4	Unit Commander or representative will remain with equipment until acceptance by responsible preservation site personnel.		
	b. Cleaning, Preservation, Packaging, Packing and Marking.		
	WARNING Before cleaning and packaging, BE SURE WEAPON IS CLEAR. Do not actuate trigger until weapon has been cleared. Inspect chamber to insure that it is empty and check to see that no ammunition is in position to be introduced. Avoid having live ammunition in vicinity of work area.		
1	Disassemble weapon as necessary to accomplish thorough cleaning.		
2	Clean barrel bore, chamber and any parts having heavy contaminates with a metallic brush (1005–550–4036) saturated with solvent, cleaning compound (MIL–C–372) (6850–753–4806). Use rod furnished as "special tools".		
3	Remove cleaner from bore and chamber using swab, small arms, size 2½″ x 2½″ (1005–288–3565).		
4	Further cleaning of all surfaces shall be accomplished by complete immersion, or by wiping with rags (DDD–R–30) (7920–205–3570) saturated with solvent (P–D–680) (6850–285–8012), accompanied by scrubbing and agitation.		
5	Position parts to allow complete drainage.		
6	Rinse parts in clean solvent (P–D–680) (6850–285–8012), to remove residues.		
7	Drain and dry with compressed air, or wipe with rags (DDD–R–30) (7920–205–3570).		
8	Cleaning of canvas, webbing, synthetic materials and wood, shall be by any process, or combination of processes which will accomplish thorough cleaning without damage to the item(s). Clean by brushing, wiping, etc.		
9	Reassemble weapon.		

Step	Function	Mech	Insp
10	Metallic surfaces of weapons, shall be coated with corrosion preventative compound (VV–L–800) (9150–281–2007), applied by dipping.		
11	Drain excess oil from weapon, changing draining position as necessary to accomplish thorough drainage.		
12	Wrap pistol with a 12″ x 18″ piece of paper, volatile, packaging (MIL–P–3420) (8135–985–7242).		
13	Place each wrapped pistol in a 10″ x 12″ bag (MIL–B–131) (8135–282–0565).		
14	Close bag by heat sealing.		
15	Place sealed bag in unit fiberboard box (PPP–F–320) (8135–132–9067), size 10½″ x 6″ x 3½″.		
16	Rod cleaning shall be cleaned by wiping with rags (DDD–R–30) (7920–205–3570) saturated with solvent (P–D–680) (6850–285–8012).		
17	Dry rod using compressed air, or by wiping with rags (DDD–R–30) (7920–205–3570).		
18	Brush, cleaning shall be cleaned by immersion, followed by agitation in solvent (P–D–680) (6850–285–8012).		
19	Drain excess solvent from brush and dry with compressed air.		
20	Clean magazines by immersion and agitation in solvent (P–D–680) (6850–285–8012).		
21	Dry magazines with compressed air, or by wiping with rags (DDD–R–30) (7920–205–3570).		
22	Overwrap cleaning rod, brush, and magazines with volatile paper (MIL–P–3420) (8135–985–7242) size 12″ x 16″.		
23	Clean holster by wiping with rags (DDD–R–30) (7920–205–3570), or by using compressed air.		
24	Dry holster by wiping with rags (DDD–R–30) (7920–205–3570).		
25	Wrap all straps and thongs around body of holster.		
26	Wrap holster with barrier material (MIL–B–121) (8135–226–3124) size 12″ x 16″.		
27	Secure wrap with tape (PPP–T–60) (8135–890–9873) size 2″ x 4″ (3 pcs required).		
28	Place wrapped cleaning rod, brush and magazines, together with the wrapped holster in the unit container.		
29	Fill void space of unit container with cushioning material (PPP–C–843) (8135–855–6969), size 12″ x 18″.		
30	Seal all seams and joints of container with tape (PPP–T–60) (8135–890–9873) size 2″ x 66″.		
31	The following marking shall be applied to each unit container with ink, marking, stencil, black (TT–I–559) (7510–161–0811): Federal Stock Number Item description 1 Each Preserved on (month-day-year) for a maximum of 180 days Gross Weight: 4.55 Cube: .166		
32	Assemble cleated plywood shipping container, size 33¼″ x 26¼″ x 24¾″ in accordance with Figure A–13 using 8D nails (FF–N–105) (5315–010–6507), 10D nails (FF–N–105) (5315–010–6509), and 6D nails (FF–N–105) (5315–161–8607).		
33	Place 72 unit packaged weapons, W/E in a shipping container (Figure A–13).		
34	Close shipping container with 8D nails (FF–N–105) (5315–010–6507).		
35	Secure shipping container with steel strapping (QQ–S–781) (8135–283–0669) size ¾″ x 114″ long, 3 pcs required.		
36	Secure steel strapping with 3 seals ¾″ (8135–239–5293).		
37	The following marking shall be applied to each shipping container with minimum size 1″ letter using ink, marking, stencil, black (TT–I–559) (7510–161–0811): Federal Stock Number Item description		

Step	Function	Mech	Insp
	72 Each Preserved on (month-day-year) for a maximum of 180 days Gross Weight: 435.00 Cube: 16.58		
38	Preparation instructions sheets shall be completed and placed in a waterproof envelope (MIL-B-131) (8135-282-0565), size 10″ x 12″ and secured to the item/container in a conspicuous location.		
	c. Deprocessing. Prior to placing this item in service, following receipt, deprocessing action will be in reverse of check list above.		

Table A-13. Packaging Materials List

FSN	Item description	Unit of use qty
1005-288-3565	Swab, Small Arms, Cleaning, 2½″ x 2½″, 1,000 per Package	1 ea.
*1005-550-4036	Brush, Cleaning	1 ea.
**5315-010-6507	Nail, General Purpose (FF-N-105), 8D, 2⅜″ Lg., 50 Pounds per Carton	¾ lb.
**5315-010-6509	Nail, General Purpose (FF-N-105), 10D, 2⅞″ Lg., 50 Pounds per Carton	⅛ lb.
**5315-161-8607	Nail, General Purpose (FF-N-105), 6D, 1⅞″ Lg., 50 Pounds per Carton	½ lb.
**5510-220-6078	Lumber, Soft Wood (MM-L-751), 1″ x 4″	5 bf.
**5510-220-6214	Lumber, Soft Wood (MM-L-751), 3″ x 4″	4¾ bf.
**5530-554-8709	Plywood, Soft Wood (NN-P-530), ¾″ x 48″ x 96″ Sheet	35 sf.
6850-285-8012	Solvent, Dry Cleaning (P-D-680), 55 Gallon Drum	1 qt.
6850-753-4806	Cleaning Compound Solvent (MIL-C-372), 55 Gallon Drum	1 qt.
7510-161-0811	Ink, Marking, Stencil, Black (TT-I-559), 1 Gallon Can	(***)
7920-205-3570	Rag, Wiping (DDD-R-30), 50 Pound Bale	(***)
8135-132-9067	Fiberboard, Corrugated (PPP-F-320), 48″ x 96″ Sheet	2½ sf.
8135-226-3124	Barrier Material, Greaseproof, Waterproof, Flexible (MIL-B-121), 36″ x 200 Yard Roll	¼ yd.
**8135-239-5293	Seal, Strapping, Closed Type, W/O Ears, ¾″, 1.7812 x 0.8075 Wide, 5,000 per Box	3 ea.
8135-282-0565	Barrier Material, Water-Vaporproofed, Flexible (MIL-B-131), 36″ x 200 Yard Roll	¼ yd.
**8135-282-0565	Barrier Material, Water-Vaporproofed, Flexible (MIL-B-131), 36″ x 200 Yard Roll	⅛ yd.
**8135-283-0669	Strapping, Steel, Nailless (QQ-S-781), ¾″ x 0.023″, 100 Pound Coil	28½ ft.
8135-855-6969	Cushioning Material, Cellulosic (PPP-C-843), ¾″ x 24″ x 167 Foot Package	¾ ft.
8135-890-9873	Pressure Sensitive Tape (PPP-T-60), 2″ x 60 Yard Roll	1 yd.
8135-985-7242	Paper, Volatile, Packaging (MIL-P-3420), 36″ x 100 Foot Roll	1 ft.
9150-281-2007	Corrosion, Preventative Compound, Lubricating Oil, General Purpose (VV-L-800), 55 Gallon Drum.	1 pt.
9310-160-7858	Board, Stencil, UU-S-625, 100 sh	(***).

*Material requirements for 20 pistols.
**Material requirements for 72 pistols.
***These items will be required in addition to the packaging materials listed above and will be used as needed.

Bill of Materials

Name	No. req'd	Material	Dimensions	FSN
Ends	2	Plywood	26¼″ x 24⅜″ x ¾″	5530-554-8709
Sides	2	Plywood	36¼″ x 24⅜″ x ¾″	5530-554-8709
Top	1	Plywood	36¼″ x 27¾″ x ¾″	5530-554-8709
Bottom	1	Plywood	36¼″ x 27¾″ x ¾″	5530-554-8709
Vertical Cleat	4	Wood	1″ x 4″ x 24¼″	5510-220-6078
Horizontal Cleat	4	Wood	1″ x 4″ x 19″	5510-220-6078
Skids	2	Wood	3″ x 4″ x 27¾″	5510-220-6214

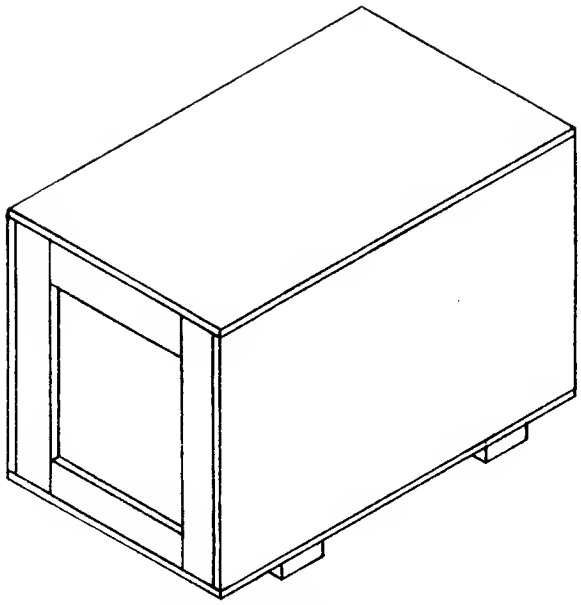

Figure A–13. Shipping Container.

APPENDIX A–14

PREPARATION INSTRUCTIONS FOR SHIPMENT: SURFACE VESSEL TRANSPORT

	FSN	ITEM DESCRIPTION
☐	1005–561–2003	Pistol, Cal. .45, M1911A1, W/E.
☐	1005–673–7965	Pistol, Cal. .45, M1911A1, W/E.

PRESERVED: _____ (Month) _____ (Day) _____ (Year)

PRESERVED FOR A MAXIMUM OF 180 DAYS

NOTE:

Function: Relates to instructions to be accomplished in preparation of the equipment for shipment.

Mech: For initials of mechanic or responsible processing personnel to indicate function has been completed.

Insp: For initials of inspector certifying that function has been completed as indicated by the mechanic or processing personnel.

Step	Function	Mech	Insp
	a. Unit Responsibility.		
1	Assure that weapon is in good operating condition.		
2	Certify that weapon, magazines and containers are free of ammunition and explosives.		
3	As directed, weapon, complete with tools and equipment, will be delivered to designated processing site.		
4	Unit Commander, or representative, will reamin with equipment until acceptance by responsible preservation site personnel.		
	b. Cleaning, Preservation, Packaging, Packing and Marking.		
	WARNING Before cleaning and packaging, BE SURE WEAPON IS CLEAR. Do not actuate trigger until weapon has been cleared. Inspect chamber to insure that it is empty and check to see that no ammunition is in position to be introduced. Avoid having live ammunition in vicinity of work area.		
1	Disassemble weapon, as necessary, to accomplish thorough cleaning.		
2	Clean barrel bore, chamber and any parts having heavy contaminates with a metallic brush (1005–550–4036) saturated with solvent, cleaning compound (MIL–C–372) (6850–753–4806). Use rod furnished as "special tools".		
3	Remove cleaner from bore and chamber using swab, small arms, size 2½″ x 2½″ (1005–288–3565).		
4	Further cleaning of all surfaces shall be accomplished by complete immersion, or by wiping with rag (DDD–R–30) (7920–205–3570) saturated with solvent (P–D–680) (6850–285–8012) accompanied by scrubbing and agitation.		
5	Position parts to allow complete drainage.		
6	Rinse parts in clean solvent (P–D–680) (6850–285–8012) to remove residues.		
7	Drain and dry with compressed air, or wipe with rags (DDD–R–30) (7920–205–3570).		
8	Cleaning of canvas, webbing, synthetic materials and wood, shall be by any process, or combination of processes which will accomplish thorough cleaning without damage to the item(s). Clean by brushing, wiping, etc.		
9	Reassemble weapon.		

Step	Function	Mech	Insp
10	Metallic surfaces of weapons shall be coated with corrosion preventative compound (VV–L–800) (9150–281–2007), applied by dipping.		
11	Drain excess oil from weapon, changing draining position as necessary to accomplish thorough drainage.		
12	Wrap pistol with a 12″ x 18″ piece of paper, volatile (MIL–P–3420) (8135–985–7242).		
13	Place each wrapped pistol in a 10″ x 12″ bag (MIL–B–131) (8135–282–0565).		
14	Close bag by heat sealing.		
15	Place sealed bag in unit fiberboard box (PPP–F–320) (8135–132–9067) size 10½″ x 6″ x 3½″.		
16	Rod, cleaning shall be cleaned by wiping with rags (DDD–R–30) (7920–205–3570) saturated with solvent (P–D–680) (6850–285–8012).		
17	Dry rod using compressed air, or by wiping with rags (DDD–R–30) (7920-205–3570).		
18	Brush, cleaning shall be cleaned by immersion, followed by agitation in solvent (P–D–680) (6850–285–8012).		
19	Drain excess solvent from brush and dry with compressed air.		
20	Clean magazines by immersion and agitation in solvent (P–D–680) (6850-285–8012).		
21	Dry magazines with compressed air, or by wiping with rags (DDD–R–30) (7920–205–3570).		
22	Overwrap cleaning rod, brush, and magazines with volatile paper (MIL–P–3420) (8135–985–7242) size 12″ x 12″.		
23	Clean holster by wiping with rags (DDD–R–30) (7920–205–3570), or by using compressed air.		
24	Dry holster by wiping with rags (DDD–R–30) (7920–205–3570).		
25	Wrap all straps and thongs around body of holster.		
26	Wrap holster with barrier material (MIL–B–121) (8135–226–3124), size 12″ x 16″.		
27	Secure wrap with tape (PPP–T–60) (8135–890–9873) size 2″ x 4″ (3 pieces required).		
28	Place wrapped cleaning rod, brush, and magazines, together with the wrapped holster, in the unit container. See step 16.		
29	Fill void space of unit container with cushioning material (PPP–C–843) (8135–855–6969) size 12″ x 18″.		
30	Seal all seams and joints of container with tape (PPP–T–60) (8135–890–9873) size 2″ x 66″.		
31	The following marking shall be applied to each unit container with ink, marking, stencil, black (TT–I–559) (7510–161–0811). Federal Stock Number Item description 1 Each Preserved on (month-day-year) for a maximum of 180 days Gross Weight 4.22 Cube .166		
32	Assemble cleated plywood shipping container, 33¼″ x 26¼″ x 24⅜″ in accordance with Figure A–14, using 8D nails (FF–N–105) (5315–010–6507), 10D nails (FF–N–105) (5315–010–6509) and 6D nails (FF–N–105) (5315–161–8607).		
33	Place 72 unit packaged weapons, W/E in a shipping container (Figure A–14).		
34	C ose shipping container with 8D nails (FF–N–105), (3515–010–6507).		
35	Secure shipping container with steel strapping (QQ–S–781) (8135–283–0669) ¾″ x 117″ long. (2 pieces required).		
36	Secure steel strapping with 3 seals ¾″ (8135–239–5293).		
37	The following marking shall be applied to each shipping container with minimum 1″ letters using ink, marking, stencil, black (TT–I–559) (7510–161–0811). Federal Stock Number Item description 72 Each Preserved on (month-day-year) for a maximum of 180 days Gross Weight: 406 Cube 16.58		

Step	Function	Mech	Insp
38	Preparation instructions sheets shall be completed and placed in a waterproof envelope (MIL–B–131) (8135–282–0565) 10″ x 12″ and secured to the item/container in a conspicuous location.		
	c. Deprocessing: Prior to placing the item in service following receipt, deprocessing action, in reverse of checklist must be completed.		

Table A–14. Packaging Materials List

FSN	Item description	Unit of use qty
1005–288–3565	Swab, Small Arms Cleaning, 2½″ x 2½″, 1,000 per package	1 ea.
*1005–550–4036	Brush, Cleaning	1 ea.
**5315–010–6507	Nail, General Purpose (FF–N–105) 8D, 2⅜″ long, 50 pounds per carton	⅔ lb.
**5315–010–6509	Nail, General Purpose (FF–N–105) 10D, 2⅞″ long, 50 pounds per carton	¼ lb.
**5315–161–8607	Nail, General Purpose (FF–N–105) 6D, 1⅞″ long, 50 pounds per carton	½ lb.
**5510–220–6078	Lumber, Soft Wood (MM–L–751), 1″ x 4″	5 bf.
**5510–220–6214	Lumber, Soft Wood (MM–L–751) 3″ x 4″	4¾ bf.
**5530–554–8709	Plywood, Soft Wood (NN–P–530) ¾″ x 48″ x 96″ sheet	35¼ sf.
6850–285–8012	Solvent, Dry Cleaning (P–D–680), 55 gallon drum	3 pt.
6850–753–4806	Cleaning Compound Solvent (MIL–C–372) 55 gallon drum	3 pt.
7510–161–0811	Ink, Marking, Stencil, Black (TT–I–559), 1 gallon can	(***).
7920–205–3570	Rag, Wiping (DDD–R–30), 50 pound bale	(***).
8135–132–9067	Fiberboard, Corrugated (PPP–F–320) 48″ x 96″ sheet	2½ sf.
8135–226–3124	Barrier Material, Greaseproof Waterproof, Flexible (MIL–B–121) 36″ x 200 yard roll	⅛ yd.
**8135–239–5293	Seal, Strapping, Closed Type W/O Ears, ¾″, 1.7812 x 0.8075 Wide 5,000 per box	3 ea.
8135–282–0565	Barrier Material, Water-Vaporproofed Flexible (MIL–B–131) 36″ x 200″ yard roll	¼ yd.
**8135–282–0565	Barrier Material, Water-Vaporproofed Flexible (MIL–B–131) 36″ x 200″ yard roll	⅓ yd.
**8135–283–0669	Strapping, Steel, Nailless (QQ–S–781) ¾″ x 0.023″ 100 pound coil	20 ft.
8135–855–6969	Cushioning Material, Cellulosic (PPP–C–843), ¾″ x 24″ x 167 foot package	¾ ft.
8135–890–9873	Pressure Sensitive Tape (PPP–T–60) 2″ x 60 yard roll	3½ yd.
8135–985–7242	Paper, Volatile, Packaging (MIL–P–3420) 36″ x 100 foot roll	1 ft.
9150–281–2007	Corrosion, Preventative Compound Lubricating Oil, General Purpose (VV–L–800), 55 gallon drum.	1 pt.
9310–160–7858	Board, Stencil (UU–S–625) 100 sh	(***).

*Material requirements for 20 pistols.
**Material requirements for 72 pistols.
***These items will be required in addition to the packaging materials listed above and will be used as needed.

Bill of Materials

Name	No. req'd	Material	Dimensions	FSN
End	2	Plywood	26¼″ x 24⅜″ x ¾″	5530–554–8709
Side	2	Plywood	36¼″ x 28¾″ x ¾″	5530–554–8709
Top	1	Plywood	36¼″ x 27¾″ x ¾″	5530–554–8709
Bottom	1	Plywood	36¼″ x 27¾″ x ¾″	5530–554–8709
Vertical Cleat	4	Wood	1″ x 4″ x 24¼″	5510–220–6078
Horizontal Cleat	4	Wood	1″ x 4″ x 19″	5510–220–6078
Skid	2	Wood	3″ x 4″ x 27¾″	5510–220–6214

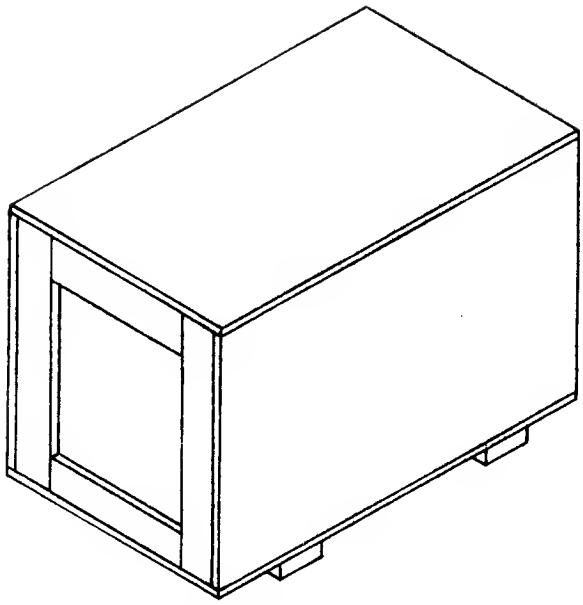

A-14. Shipping container.

APPENDIX A-15

PREPARATION INSTRUCTIONS FOR SHIPMENT: SURFACE VESSEL TRANSPORT

FSN	ITEM DESCRIPTION
☐ 1005-589-1271	Rifle, 7.62 Millimeter, M14,W/E.

PRESERVED: _____ (Month) _____ (Day) _____ (Year)

PRESERVED FOR A MAXIMUM OF 180 DAYS

NOTE:

Function: Relates to instructions to be accomplished in preparation of the equipment for shipment.

Mech: For initials of mechanic or responsible processing personnel to indicate function has been completed.

Insp: For initials of inspector certifying that function has been completed as indicated by the mechanic or processing personnel.

Step	Function	Mech	Insp
	a. Unit Responsibility.		
1	Assure that weapon is in operating condition prior to movement of processing site.		
2	Certify that weapon, magazines and containers are free of ammunition.		
3	Deliver weapon, complete with tools and equipment, to designated processing site.		
4	Unit Commander or representative will remain with weapons until acceptance by responsible preservation site personnel.		
	b. Cleaning, Preservation, Packaging, Packing, and Marking.		
	WARNING Before cleaning and packaging, BE SURE WEAPON IS CLEAR. Do not actuate trigger until weapon has been cleared. Inspect chamber to insure that it is empty and check to see that no ammunition is in position to be introduced. Avoid having live ammunition in vicinity of work area.		
1	Disassemble weapon, as necessary, in preparation for thorough cleaning.		
2	Clean exterior surfaces of metal parts with a rag (DDD-R-30) (7920-205-3570), saturated with solvent cleaning compound (MIL-C-372) (6850-753-4806).		
3	Clean barrel bore, chamber and heavy contaminants of exterior surfaces with a snug fitting bristle brush (1005-556-4174) and (1005-690-8441), saturated with solvent cleaning compound (MIL-C-372) (6850-753-4806). Use rod furnished as "special tools."		
4	Further cleaning of metal parts shall be accomplished by complete immersion in drycleaning solvent (P-D-680) (6850-285-8012), accompanied by scrubbing and agitating or with a solvent-saturated rag (DDD-R-30) (7920-205-3570).		
5	Rinse parts with drycleaning solvent (P-D-680) (6850-285-8012).		
6	Drain and dry clean parts with dry compressed air or with dry wiping rags (DDD-R-30) (7920-205-3570). The barrel bore and chamber shall be dried with cleaning swabs (1005-288-3565). All cleaned surfaces shall be dried prior to preservative application.		
7	Cleaning of canvas, webbing, synthetic materials, and wood shall be by any process or combination of processes which will accomplish thorough cleaning without damage to the item(s) (brushing, wiping, etc.).		

Step	Function	Mech	Insp
8	Apply general purpose lubricating oil (VV-L-800) (9150-281-2007) to all metallic surfaces by any applicable procedure. Excess oil shall be thoroughly drained prior to packaging.		
9	Insert a VCI treated bore tube (1005-336-0225) into bore of barrel bending protruding portion over the muzzle end.		
10	Wrap weapon with a piece of volatile paper (MIL-P-3420) (8135-985-7242) 18″ x 48″.		
11	Wrap sling, Item 9 (Table A-15-2), in a piece of volatile paper (MIL-P-3420) (8135-282-0565), 8″ x 12″.		
12	Insert weapon and sling into a barrier bag (MIL-B-131) (8135-282-0565), 12″ x 50″.		
13	Close bag by heat sealing.		
14	Wrap each bagged weapon with cushioning material (PPP-C-843) (8135-855-6969), 18″ x 48″ (3 pcs required).		
15	Secure in place with pressure sensitive tape (PPP-T-60) (8135-890-9873), 2″ x 6″ (4 pcs required).		
16	Position four (4) bag-cushioned weapons alternately within a corrugated fiberboard box (PPP-F-320) (8135-132-9067) 45½″ x 21½″ x 5½″.		
17	Cover weapons with cushioning material (PPP-C-843) (8135-855-6969) 24″ x 48″.		
18	Position one piece of corrugated fiberboard (PPP-F-320) (8135-132-9067), 21″ x 45″, over cushioned rifles.		
19	Place cushioning material (PPP-C-843) (8135-855-6969) 24″ x 48″ over fiberboard sheet.		
20	Clean, dry, preserve and package basic issue items in accordance with Table A-15-2 and as specified herein.		
21	Wrap items 1, 2, and 3 (Table A-15-2) together in a piece of volatile paper (MIL-P-3420) (8135-985-7242), 6″ x 10″.		
22	Wrap item 4 (Table A-15-2) in a piece of volatile paper (MIL-P-3420) (8135-985-7242) 3″ x 3″.		
23	Place items 1 through 8 (Table A-15-2) in a barrier bag (MIL-B-131) (8135-282-0565), 10″ x 12″.		
24	Close bag by heat sealing.		
25	Wrap magazines, item 10 (Table A-15-2) with volatile paper (MIL-P-3420) (8135-985-7242), 9″ x 9″, (5 pcs required).		
26	Place wrapped magazines in a barrier bag (MIL-B-131) (8135-282-0565), 10″ x 12″.		
27	Close bag by heat sealing.		
28	Insert four (4) sets of Basic Issue Items, packaged as specified above, in the container with the weapons.		
29	Cover Basic Issue Items with cushioning material (PPP-C-843) (8135-855-6969), 24″ x 48″.		
30	Close box and seal with pressure sensitive tape (PPP-T-60) (8135-890-9873), 2″ x 200″.		
31	The following marking shall be applied to each unit container with ink, marking, stencil black (TT-I-559) (7510-161-0811): 1005-589-1271 Rifle, 7.62 Millimeter, M14 W/E 4 Each Preserved on (month-day-year) for a maximum of 180 days Gross Weight: 54.60 Cube: 3.500		
32	Assemble shipping container 46″ x 44″ x 30″ (see figure A-15-2) utilizing 8D nails (FF-N-105) (5315-010-6507), 16D nails (FF-N-105) (5315-010-6511) and 6D nails (FF-N-105) (5315-161-8607).		
33	Pack ten (10) Rifle containers unit packaged as above, in assembled shipping container.		

Step	Function	Mech	Insp
34	Close container with 8D nails (FF–N–105) (5315–010–6507).		
35	Apply steel strapping (QQ–S–781) (8135–283–0669) ¾″ x 160″ (3 pieces required).		
36	Secure strapping with seals, ¾″ (8135–239–5293) (3 required).		
37	Apply the following marking on each shipping container using ink, marking, stencil, black (TT–I–559) (7510–161–0811) in 1″ minimum size letters: 1005–589–1271 Rifle, 7.62 Millimeter, M14, W/E 40 Each Preserved on (month-day-year) for a maximum of 180 days Gross Weight: 732.00 Cube: 49.260		
38	Preparation instructions sheets shall be completed and placed in a waterproof envelope (MIL–B–131) (8135–282–0565), 10″ x 12″ and secured to the item/container in a conspicuous location.		
	c. Deprocessing. Prior to placing this item in service, following receipt, deprocessing action will be in reverse of checklist above.		

Table A–15–1. Packaging Materials List

FSN	Item description	Unit of use qty.
1005–288–3565	Swab, Small Arms Cleaning, 2½″ x 2½″, 1,000 per Package	3 ea.
1005–336–0225	Tube, Bore, VCI Treated .19 O.D. x 28½″	1 ea.
*1005–556–4174	Brush, Cleaning, Small Arms Bore	1 ea.
*1005–690–8441	Brush, Cleaning, Small Arms Chamber	1 ea.
***5315–010–6507	Nail, General Purpose (FF–N–105), 8D, 2⅜″ Lg., 50 Pounds per Carton	⅔ lb.
***5315–010–6511	Nail, General Purpose (FF–N–105), 16D, 3¼″ Lg., 50 Pounds per Carton	⅓ lb.
***5315–161–8607	Nail, General Purpose (FF–N–105), 6D, 1⅞″ Lg., 50 Pounds per Carton	⅛ lb.
***5510–220–6078	Lumber, Soft Wood (MM–L–751), 1″ x 4″	8 bf.
***5510–220–6226	Lumber, Soft Wood (MM–L–751), 4″ x 4″	13¼ bf.
***5530–554–8709	Plywood, Soft Wood (NN–P–530), ¾″ x 48″ x 96″ Sheet	81¾ sf.
6850–285–8012	Solvent, Drycleaning (P–D–680), 55 Gallon Drum	1 pt.
6850–753–4806	Cleaning Compound Solvent (MIL–C–372) 55 Gallon Drum	1 pt.
7510–161–0811	Ink, Marking, Stencil, Black (TT–I–559) 1 Gallon Can	(****).
7920–205–3570	Rag, Wiping (DDD–R–30), 50 Pound Bale	(****).
**8135–132–9067	Fiberboard, Corrugated (PPP–F–320), 48″ x 96″ Sheet	32½ sf.
***8135–239–5293	Seal, Strapping, Closed Type W/O Ears, ¾″, 1.7812 x 0.8075 Wide, 5000 per Box	3 ea.
8135–282–0565	Barrier Material, Water-Vaporproofed, Flexible (MIL–B–131), 36″ x 200 Yard Roll	1¾ yd.
***8135–282–0565	Barrier Material, Water-Vaporproofed, Flexible (MIL–B–131), 36″ x 200 Yard Roll	⅓ yd.
***8135–283–0669	Strapping, Steel, Nailless (QQ–S–781) ¾″ x 0.023″, 100 Pound Coil	38¼ ft.
8135–855–6969	Cushioning Material, Cellulosic (PPP–C–843), ¾″ x 24″ x 167 Foot Package	12 ft.
**8135–855–6969	Cushioning Material, Cellulosic (PPP–C–843), ¾″ x 24″ x 167 Foot Package	4 ft.
8135–890–9873	Pressure Sensitive Tape (PPP–T–60), 2″ x 60 Yard Roll	¾ yd.
**8135–890–9873	Pressure Sensitive Tape (PPP–T–60), 2″ x 60 Yard Roll	5½ yd.
8135–985–7242	Paper, Volatile, Packaging (MIL–P–3420) 36″ x 100 Foot Roll	3⅓ ft.
9150–281–2007	Corrosion Preventative Compound, Lubricating Oil, General Purpose (VV–L–800), 55 Gallon Drum.	2 oz.
9310–160–7858	Board, Stencil, UU–S–625 100 sh	(****).

*Material requirements for 50 rifles.
**Material requirements for 4 rifles.
***Material requirements for 40 rifles.
****These items will be required in addition to the packaging materials listed above and will be used as needed.

Table A-15-2. Preservation for Basic Issue Items

Step	Item description	Qty	Cleaning	Drying	Preservative	Container & Class	Container Size	Remarks	Mech	Insp
1	Rod Section, Cleaning, Small Arms	4	C-3	D-1						
2	Swab, Holder, Section, Small Arms	1	C-3	D-1						
3	Combination Tool	1	C-3	D-1						
4	Conversion Kit, Spring and Selector	1	C-3	D-1						
5	Brush, Cleaning, Small Arms, Bore	1	C-1							
6	Case, Small Arms Cleaning Rod	1	C-1							
7	Brush, Cleaning, Small Arms, Chamber	1	C-1							
8	Case Lubricant	1	C-1							
9	Sling, Small Arms: M1, Webbing	1	C-1							
10	Magazine, Cartridge (20 Cartridges)	1	C-1							

EXPLANATION OF CODES

C-1 Any applicable method not injurious to the item. Normally accomplished by wiping with a rag (DDD-R-30) (7920-205-3570).

C-3 Wipe or scrub item with a rag (DDD-R-30) (7920-205-3570) saturated with drycleaning solvent (P-D-680) (6850-285-8012), or dip in solvent and brush clean.

D-1 Wipe with clean rag (DDD-R-30) (7920-205-3570) to insure removal of solvent.

P-9 Apply a light coat of corrosion preventative compound, lubricating oil, general purpose (VV-L-800) (9150-281-2007) by dipping or brushing.

P-18 Wrap item with paper volatile corrosion inhibitor (MIL-P-3420) (8135-985-7242). Place dull side of material to the inside and foil side to outside.

P-19 Apply a light coat of corrosion preventive compound (MIL-C-16173) (8030-526-1604), by dipping or brushing. Allow to dry before handling.

NOTE

CONTAINERS:

E-Bag—Fabricated from (MIL-B-131) (8135-282-0565).
Box—Fabricated from (PPP-F-320) (8135-132-9067).
Bag closure—Heat Seal.
Box closure—RSC Cartons: Seal the center seams of top and bottom with tape (PPP-T-60) (8135-890-9873).
OPF Cartons: Seal the top center seam with tape (PPP-T-60) (8135-890-9873).

Bill of Materials

Name	Qty. req'd	Material	Dimensions	FSN
Ends	2	Plywood	44" x 30" x ¾"	5530-554-8709
Sides	2	Plywood	49" x 30" x ¾"	5530-554-8709
Top	1	Plywood	49" x 45½" x ¾"	5530-554-8709
Bottom	1	Plywood	49" x 45½" x ¾"	5530-554-8709
Skids	3	Wood	4" x 4" x 45½"	5510-220-6226
Cleats	4	Wood	1" x 4" x 20¾"	5510-220-6078
Cleats	4	Wood	1" x 4" x 36⅝"	5510-220-6078

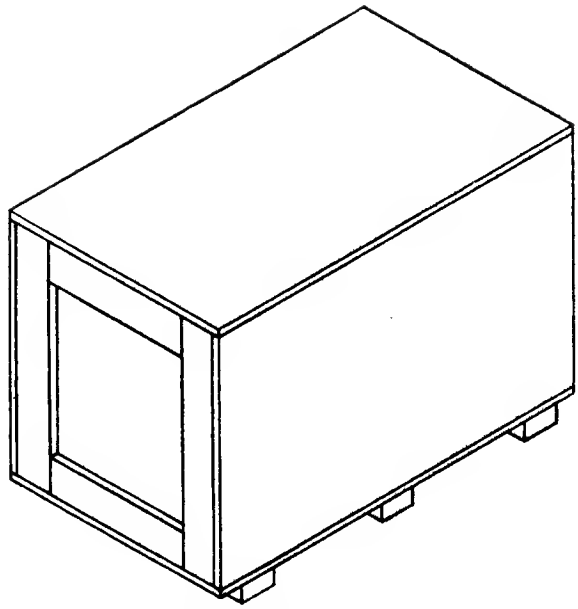

Figure A-15. Shipping container.

APPENDIX A–16

PREPARATION INSTRUCTIONS FOR SHIPMENT: SURFACE VESSEL TRANSPORT

	FSN	ITEM DESCRIPTION
☐	1005-602-0898	Pistol, Cal. .22 High Standard.
☐	1005–736–7841	Pistol, Cal. .22 Ruger, Mark I.
☐	1005-831-1267	Pistol, Cal. .22 Smith and Wesson M46.

PRESERVED: _____ (Month) _____ (Day) _____ (Year)

PRESERVED FOR A MAXIMUM OF 180 DAYS

NOTE:

Function: Relates to instructions to be accomplished in preparation of the equipment for shipment.

Mech: For initials of mechanic or responsible processing personnel to indicate function has been completed.

Insp: For initials of inspector certifying that function has been completed as indicated by the mechanic or processing personnel.

Step	Function	Mech	Insp
	a. Unit Responsibility.		
1	Assure that weapon is in good operating condition.		
2	Certify that weapon, magazine, and containers are free of ammunition and explosives.		
3	As directed, weapon, complete with tools and equipment, will be delivered to designated processing site.		
4	Unit Commander, or representative, will remain with equipment until acceptance by responsible preservation site personnel.		
	b. Cleaning, Preservation, Packaging, Packing and Marking.		
	WARNING Before cleaning and packaging, BE SURE WEAPON IS CLEAR. Do not actuate trigger until weapon has been cleared. Inspect chamber to insure that it is empty and check to see that no ammunition is in position to be introduced. Avoid having live ammunition in vicinity of work area.		
1	Disassemble weapon as necessary to accomplish thorough cleaning.		
2	Clean barrel bore, chamber and any parts having heavy contaminates with a metallic brush (1005–903–1296) saturated with solvent, cleaning (MIL-C-372) (6850–753–4806). Use rod furnished as "special tools."		
3	Remove cleaner from bore, using swabs, size 2½″ x 2½″ (1005–288–3565).		
4	Further cleaning of all surfaces shall be accomplished by complete immersion, or by wiping with rags (DDD-R-30) (7920–205–3570) saturated with solvent (P–D–680) (6850–285–8012) accomplished by scrubbing and agitation.		
5	Position parts to allow complete drainage.		
6	Rinse parts in clean solvent (P-D–680) (6850–285-8012), to remove residues.		
7	Drain and dry with compressed air, or wipe with rags (DDD–R–30) (7920–205–3570).		
8	Cleaning of canvas, webbing, synthetic materials and wood shall be by any process, or combination of processes which will accomplish thorough cleaning without damage to the item(s). Clean by brushing, wiping, etc.		
9	Reassemble weapon.		
10	Metallic surfaces, of weapons, shall be coated with corrosion preventative compound (VV–L–800) (9150–281–2007) applied by dipping.		

Step	Function	Mech	Insp
11	Drain excess oil from weapon, changing draining position as necessary, to accomplish thorough drainage.		
12	Wrap pistol with a 16″ x 18″ piece of paper, packaging (MIL-P-3420) (8135-985-7242).		
13	Place each wrapped pistol in a 7″ x 15″ bag (MIL-B-131) (8135-282-0565).		
14	Close bag by heat sealing.		
15	Place sealed bag in a fiberboard box (PPP-F-320) (8135-132-9067). Size 11½″ x 5½″ x 2¼″.		
16	Fill void space, of box, with cushioning material (PPP-C-843) (8135-855-6969). Size 12″ x 12″.		
17	Close box and seal the top center seam with tape (PPP-T-60) (8135-890-9873), size 2″ x 14″.		
18	The following marking shall be applied to each unit container with ink, marking, stencil, black (TT-I-559) (7510-161-0811): Federal stock number Item description 1 Each Preserved on (month-day-year) for a maximum of 180 days Gross weight: 3.65 Cube: .107		
19	Assemble cleated plywood shipping container, size 36″ x 29¾″ x 21½″, in accordance with Figure A-16, using 8D nails (FF-N-105) (5315-010-6507), 10D nails (FF-N-105) (5315-010-6509) and 6D nails (FF-N-105) (5315-161-8607).		
20	Place 120 unit packaged pistols in a shipping container. (Figure A-16).		
21	Close shipping container with 8D nails (FF-N-105) (5315-10-657).		
22	Secure shipping container with three (3) steel straps (QQ-S-781) (8135-283-0669), size ¾″ x 125″ long.		
23	Secure steel strapping with 3 seals, (8135-239-5293).		
24	The following marking shall be applied to each shipping container, with minimum size 1″ letters, using ink, marking, stencil, black (TT-I-559) (7510-161-0811). Federal stock number Item description 120 Each Preserved on (month-day-year) for a maximum of 180 days Gross weight: 545.00 Cube: 18.07		
25	Preparation instructions sheets shall be completed and placed in a waterproof envelope (MIL-B-131) (8135-282-0565), size 10″ x 12″ and secured to the item/container in a conspicuous location.		
	c. Deprocessing. Prior to placing the item in service following receipt, deprocessing action, in reverse of checklist must be completed.		

Table A–16. Packaging Materials List

FSN	Item description	Unit of use qty
1005–288–3565	Swab, Small Arms Cleaning, 2½″ x 2½″, 1000 per package	1 ea.
*1005–903–1296	Brush, Cleaning, Small Arms	1 ea.
5315–010–6507	Nail, General Purpose (FF–N–105), 8D 2⅜″ long, 50 pounds per carton	⅔ lb.
5315–010–6509	Nail, General Purpose (FF–N–105), 10D, 2⅞″ long, 50 pounds per carton	1/10 lb.
5315–161–8607	Nail, General Purpose (FF–N–105), 6D, 1⅞″ long, 50 pounds per carton	½ lb.
*5510–220–6078	Lumber, Soft Wood (MM–L–751), 1″ x 4″	5 bf.
*5510–220–6214	Lumber, Soft Wood (MM–L–751), 3″ x 4″	5⅛ bf.
*5530–554–8709	Plywood, Soft Wood (NN–P–530) ¾″ x 48″ x 96″ sheet	38 sf.
6850–285–8012	Solvent, Dry Cleaning (P–D–680), 55 gallon drum	1 pt.
6850–753–4806	Cleaning Compound Solvent (MIL–C–372), 55 gallon drum	1 pt.
7510–161–0811	Ink, Marking, Stencil, Black (TT–I–559), 1 gallon can	(**)
7920–205–3570	Rag, Wiping (DDD–R–30), 50 pound bale	(**)
8135–132–9067	Fiberboard, Corrugated (PPP–F–320), 48″ x 96″ sheet	2¼ sf.
*8135–239–5293	Seal, Strapping, Closed Type W/O Ears, ¾″, 1.7812 x 0.8075 Wide, 5000 per Box	3 ea.
8135–282–0565	Barrier Material, Water-Vaporproofed, Flexible (MIL–B–131), 36″ x 200 Yard Roll	½ yd.
*8135–282–0565	Barrier Material, Water-Vaporproofed, Flexible (MIL–B–131), 36″ x 200 Yard Roll	⅓ yd.
*8135–283–0669	Strapping, Steel, Nailless (QQ–S–781) ¾″ x 0.023″, 100 Pound Coil	30 ft.
8135–855–6969	Cushioning Material, Cellulosic (PPP–C–843), ¾″ x 24″ x 167 Foot Package	½ ft.
8135–890–9873	Pressure Sensitive Tape (PPP–T–60), 2″ x 60 Yard Roll	⅜ yd.
8135–985–7242	Paper, Volatile, Packaging (MIL–P–3420), 36″ x 100 Foot Roll	⅔ ft.
9150–281–2007	Corrosion, Preventative Compound, Lubricating Oil, General Purpose, (VV–L–800), 55 Gallon Drum.	1 pt.
9310–160–7858	Board, Stencil, UU–S–625 100 sh	(**)

*Material requirements for 120 pistols.
**These items will be required in addition to the packaging materials listed above and will be used as needed.

Bill of Materials

Name	No. req'd	Material	Dimensions	FSN
End	2	Plywood	29¾″ x 21½″ x ¾″	5530–554–8709
Side	2	Plywood	39″ x 21½″ x ¾″	5530–554–8709
Top	1	Plywood	39″ x 31¼″ x ¾″	5530–554–8709
Bottom	1	Plywood	39″ x 31¼″ x ¾″	5530–554–8709
Vertical Cleat	4	Wood	1″ x 4″ x 21¼″	5510–220–6078
Horizontal Cleat	4	Wood	1″ x 4″ x 22½″	5510–220–6078
Skid	2	Wood	3″ x 4″ x 31¼″	5510–220–6214

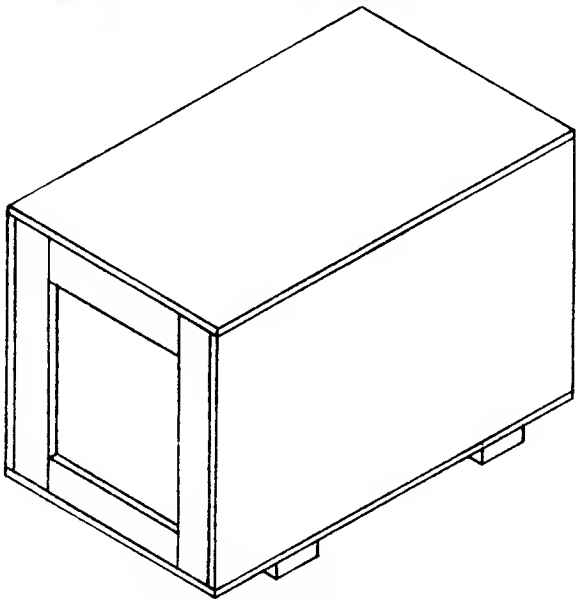

Figure A–16. Shipping Container.

APPENDIX A–17

PREPARATION INSTRUCTIONS FOR SHIPMENT: SURFACE VESSEL TRANSPORT

	FSN	ITEM DESCRIPTION
☐	1005–602–2105	Machine Gun Caliber .50 Browning M2 HB TT (M45).
☐	1005–693–4854	Machine Gun Caliber .50 Browning M2 HB TT.

PRESERVED: _____ (Month) _____ (Day) _____ (Year)

PRESERVED FOR A MAXIMUM OF 180 DAYS

NOTE:

Function: Relates to instructions to be accomplished in preparation of the equipment for shipment.

Mech: For initials of mechanic or responsible processing personnel to indicate function has been completed.

Insp: For initials of inspector certifying that function has been completed as indicated by the mechanic or processing personnel.

Step	Function	Mech	Insp
	a. Unit Responsibility.		
1	Assure that weapon and equipment are in good operating condition.		
2	Certify that weapon is free of ammunition in gun barrels, magazines and containers.		
3	Deliver complete weapon to designated processing area.		
4	Unit commander or representative will remain with equipment until acceptance by responsible preservation site personnel.		
	b. Cleaning, Preservation, Packaging, Packing and marking.		
	WARNING		
	Before cleaning and packaging, BE SURE WEAPON IS CLEAR. Do not actuate trigger until weapon has been cleared. Inspect chamber to insure that it is empty and check to see that no ammunition is in position to be introduced. Avoid having live ammunition in vicinity of work area.		
1	Disassemble weapon as necessary to accomplish desired cleaning.		
2	Clean all metallic surfaces by wiping with rag (DDD–R–30) (7920–205–3570) saturated with (MIL–C–372) (6850–753–4806).		
3	Cleaning barrel bore and chamber with swabs (1005–288–3565) using (MIL–C–372) (6850–753–4806).		
4	Clean surfaces of machine gun parts having burned powder residue with a metallic brush (1005–550–4037) saturated with rifle bore cleaner (MIL–C–372) (6850–753–4806). Use rod furnished as "special tools".		
5	After cleaning with (MIL–C–372) (6850–753–4806) rinse with a dry cleaning solvent (P–D–680) (6850–285–8012).		
6	Drain and dry with compressed air or wiping rag (DDD–R–30) (7920–205–3570) changing drying position as necessary to accomplish thorough drainage.		
7	Dry barrel bore and chamber with swabs (1005–288–3565).		
8	All cleaned surfaces shall be thoroughly dried prior to preservations.		
9	Preserve all metallic surfaces with preservative oil (VV–L–800) (9150–281–2007).		
10	Completely drain off excess oil prior to reassembly and packaging.		
11	Disengaged gun barrel shall be packaged separate from machine gun.		

Step	Function	Mech	Insp
12	Insert a bore tube, volatile corrosion inhibitor (1005–336–0216) into bore extending tube one inch beyond barrel.		
13	Wrap gun barrel in paper volatile packaging (MIL–P–3420) (8135–985–7242), 8″ x 48″.		
14	Secure wrap with tape (PPP–T–60) (8135–890–9873) 2″ x 6″ (5 pieces).		
15	The wrapped gun barrel shall be further cushioned with cellulosic material (PPP–C–843) (8135–855–6969) 9″ x 48″ and taped with (PPP–T-60) (8135–890–9873) 2″ x 10″ (5 pieces).		
16	Locate cushioned and wrapped gun barrel in (MIL–B–131) bag 10″ x 50″ (8135–282–0565).		
17	Heat seal bag.		
18	Wrap machine gun in paper volatile packaging (MIL–P–3420) (8135–985–7242), 36″ x 36″.		
19	Secure wrap with (PPP–T–60) (8135–890–9873) 2″ x 5″ (4 pieces).		
20	Cushion machine gun with cellulosic material (PPP–C–843) (8135–855–6969) 36″ x 36″.		
21	Locate wrapped and cushioned machine gun in bag (MIL–B–131) (8135–282–0565) bag 16″ x 50″.		
22	Heat seal bag.		
23	Locate bagged gun and bagged gun barrel into a fiberboard box, 46⅞″ x 9½″ x 10¼″ ID (PPP–F–320) (8135–132–9067).		
24	Cushioning material (4 pieces) 46⅞″ x 9½″ and (4 pieces) 9½″ x 10½″ (8135–132–9568) (MIL–C–7769) shall be used to sandwich and separate gun and barrel in container.		
25	Close container with (PPP–T–60) tape (8135–890–9873) 2″ x 50″ (2 pieces).		
26	Apply two girthwise straps of filament tape 1″ x 42″ (2 pieces) (PPP–T–97) (8135–582–4772).		
27	Apply the following information on each fiberboard container with stencil ink (TT–I–559) (7510–161–0811): Federal stock number Item description 1 Each Preserved on (month-day-year) for a maximum of 180 days Gross weight: 79 Cube: 3		
28	Assemble exterior shipping container (see Figure A–17) with 8D nails (FF–N–105) (5315–010–6507) and apply skids with 10D nails (FF–N–105) (5315–010–6509).		
29	Pack nine (9) packaged machine guns into a cleated plywood box, inside dimensions 47¾″ x 30¼″ x 32¼″ (see Figure A–17).		
30	Close container with 8D nails (FF–N–105) (5315–010–6507) and apply two steel strapping bands (QQ–S–781) (8135–283–0669) locking strapping with seals (8135–239–5293).		
31	Apply the following marking to 1″ letters on cleated plywood box with stencil ink (TT–I–559) (7510–161–0811): Federal stock number 9 each Item description Preserved on (month-day-year) for a maximum of 180 days Gross weight: 868 Cube: 31		
32	Preparation instructions sheets shall be completed and placed in a waterproof envelope (MIL–B–131) (8135–282–0565), 10″ x 12″ and secured to the item/container in a conspicuous location.		

Step	Function	Mech	Insp
	c. Deprocessing. Prior to placing this item in service, following receipt, deprocessing action will be in reverse of check list above.		

Table A-17. Packaging Materials List

FSN	Item description	Unit of use qty
1005-288-3565	Swab, Small Arms Cleaning, 2½" x 2½", 1,000 Per Package	10 ea.
1005-336-0216	Tube, Bore, VCI Treated, .45 O.D. x 45½" Long	1 ea.
*1005-550-4037	Brush, Cleaning, Cal .50, M4	1 ea.
*5315-010-6507	Nail, General Purpose (FF-N-105), 8D, 2⅜" Long, 50 Pounds Per Carton	1 lb.
*5315-010-6509	Nail, General Purpose (FF-N-105) 10D, ½ lb. 2⅞" Long, 50 Pounds Per Carton	½ lb.
*5510-220-6078	Lumber, Soft Wood (MM-L-751), 1" x 4"	7 bf.
*5510-220-6194	Lumber, Soft Wood (MM-L-751), 2" x 4"	6 bf.
*5530-554-8709	Plywood, Soft Wood (NN-P-530) ¾" x 48" x 96" Sheet	58 sf.
6850-285-8012	Solvent, Dry Cleaning (P-D-680), 55 Gallon Drum	1 pt.
6850-753-4806	Cleaning Compound Solvent (MIL-C-372), 55 Gallon Drum	1 pt.
7510-161-0811	Ink, Marking, Stencil, Black (TT-I-559), 1 Gallon Can	(**).
7920-205-3570	Rag, Wiping (DDD-R-30), 50 Pound Bale	(**).
8135-132-9067	Fiberboard, Corrugated (PPP-F-320), 48" x 96" Sheet	16¼ sf.
8135-132-9568	Cushioning, Bound Fiber (MIL-C-7769) 24" x 97" Sheet	7½ ft.
*8135-239-5293	Seal, Strapping, Closed Type W/O Ears, ¾", 1.7812 x 0.8075 Wide, 5,000 Per Box	3 ea
8135-282-0565	Barrier Material, Water-Vaporproofed, Flexible (MIL-B-131), 36" x 200 Yard Roll	2¼ yd.
*8135-282-0565	Barrier Material, Water-Vaporproofed, Flexible (MIL-B-131) 36" x 200 Yard Roll	⅓ yd.
*8135-283-0669	Strapping, Steel, Nailless (QQ-S-781), ¾" x 0.023", 100 Pound Coil	24 ft.
8135-582-4772	Filament-Reinforced Pressure Sensitive Tape (PPP-T-97), 1" x 60 Yard Roll	2⅓ yd.
8135-855-6969	Cushioning Material, Cellulosic (PPP-C-843), ¾" x 24" x 167 Foot Package	6 ft.
8135-890-9873	Pressure Sensitive Tape (PPP-T-60), 2" x 60 Yard Roll	7¼ yds.
8135-985-7242	Paper, Volatile, Packaging (MIL-P-3420) 36" x 100 Foot Roll	4 ft.
9150-281-2007	Corrosion, Preventative Compound, Lubricating Oil, General Purpose (VV-L-800), 55 Gallon Drum.	1 pt.
9310-160-7858	Board, Stencil, UU-S-625 100 sh	(**).

*Material requirements for 9 each Machine Guns.
**These items will be required in addition to the packaging materials listed above and will be used as needed.

Bill of Materials

Name	Qty req'd	Material	Dimensions	FSN
Ends	2	Plywood	31¼" x 30¼" x ¾"	5530-554-8709
Sides	2	Plywood	50¾" x 32¼" x ¾"	5530-554-8709
Top	1	Plywood	50¾" x 31¾" x ¾"	5530-554-8709
Bottom	1	Plywood	50¾" x 31¾" x ¾"	5530-554-8709
Cleats, Vertical	4	Wood	1" x 4" x 23"	5510-220-6078
Cleats, Horizontal	4	Wood	1" x 4" x 32"	5510-220-6078
Skids	2	Wood	2" x 4" x 31¾"	5510-220-6194

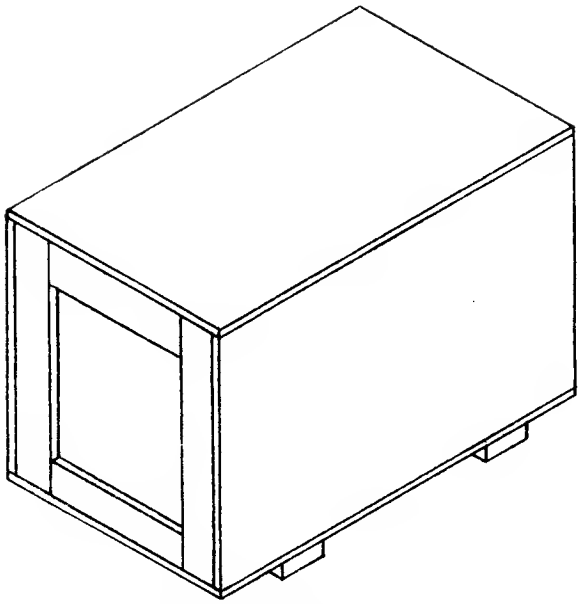

Figure A–17. Shipping Container.

APPENDIX A-18

PREPARATION INSTRUCTIONS FOR SHIPMENT: SURFACE VESSEL TRANSPORT

FSN	ITEM DESCRIPTION
☐ 1005-605-7710	Machine Gun, 7.62MM: M60, W/E.

PRESERVED: _____ (Month) _____ (Day) _____ (Year)

PRESERVED FOR A MAXIMUM OF 180 DAYS

NOTE:

Function: Relates to instructions to be accomplished in preparation of the equipment for shipment.

Mech: For initials of mechanic or responsible processing personnel to indicate function has been completed.

Insp: For initials of inspector certifying that function has been completed as indicated by the mechanic or processing personnel.

Step	Function	Mech	Insp
	a. Unit Responsibility.		
1	Assure that weapon is in operating condition prior to movement to processing site.		
2	Certify that weapon and containers are free of ammunition.		
3	Deliver weapon to designated processing site.		
4	Unit Commanders or representative will remain with weapon until acceptance by responsible preservation site personnel.		
	b. Cleaning, Preservation, Packaging, Packing, and Marking.		
	WARNING Before cleaning and packaging, Be Sure Weapon Is Clear. Do not actuate trigger until weapon has been cleared. Inspect chamber to insure that it is empty and check to see that no ammunition is in position to be introduced. Avoid having live ammunition in vicinity of work area.		
1	Disassemble weapon as necessary in preparation for cleaning.		
2	Clean exterior surfaces of metal parts with a rag (DDD-R-30) (7920-205-3570), saturated with solvent cleaning compound (MIL-C-372) (6850-753-4806).		
3	Clean barrel bore, chamber and heavy contaminants of exterior metal surfaces with snug fitting bristle brushes (1005-556-4174) and (1005-690-3115), saturated with solvent cleaning compound (MIL-C-372) (6850-753-4806). Use rod furnished as "special tools".		
4	Further cleaning of metal parts shall be accomplished by complete immersion in dry cleaning solvent (P-D-680) (6850-285-8012), accompanied by scrubbing and agitation or with a solvent saturated wiping rag (DDD-R-30) (7920-205-3570).		
5	Rinse parts with clean dry-cleaning solvent (P-D-680) (6850-285-8012).		
6	Drain and dry cleaned parts with dry compressed air or with wiping rags (DDD-R-30) (7920-205-3570). The barrel bore and chamber shall be dried with cleaning swabs (1005-288-3565). All cleaned surfaces shall be dried prior to preservation application.		
7	Apply general purpose lubricating oil (VV-L-800) (9150-281-2007), to all metallic surfaces by any applicable procedure. Excess oil shall be drained prior to packaging.		
8	Reassemble weapon with the exception of the barrel assembly.		
9	Wrap weapon with a piece of volatile paper (MIL-P-3420) (8135-985-7242), 24" x 36".		

Step	Function	Mech	Insp
10	Overwrap weapon with cushioning material (PPP-C-843) (8135-855-6969), 24″ x 36″.		
11	Secure overwrap with pressure sensitive tape (PPP-T-60) (8135-890-9873), 2″ x 6″ (4 pieces required).		
12	Place overwrapped weapon into a barrier bag (MIL-B-131) (8135-282-0565), 16″ x 40″.		
13	Close bag by heat sealing.		
14	Insert a VCI treated bore tube (1005-336-0225) (2 rqd), into the bore of each barrel assembly bending protruding portion over the muzzle end.		
15	Wrap each barrel assembly with a piece of volatile paper (MIL-P-3420) (8135-985-7242) 20″ x 36″ (2 required).		
16	Overwrap each barrel assembly with cushioning material (PPP-C-843) (8135-855-6969) 20″ x 36″ (2 required).		
17	Secure each overwrap with pressure sensitive tape (PPP-T-60) (8135-890-9873) 2″ x 6″ (6 pieces required).		
18	Place each overwrapped barrel assembly into a barrier bag (MIL-B-131) (8135-282-0565), 14″ x 35″ (2 required).		
19	Close bags by heat sealing.		
20	Place bagged barrel assemblies and weapon in a corrugated fiberboard box (PPP-F-320) (8135-132-9067), 33″ x 12½″ x 9″.		
21	Clean, dry preserve and package basic issue items in accordance with Table A-18-2 and as specified herein.		
22	Place item 1 through 3 (table A-18-2) in a barrier bag (MIL-B-131) (8135-282-0565) 4″ x 6″.		
23	Seal bag by heat sealing.		
24	Wrap item 4 (table A-18-2) in volatile paper (MIL-P-3420) (8135-985-7242), 3″ x 6″.		
25	Wrap item 5 (table A-18-2) in volatile paper (MIL-P-3420) (8135-985-7242), 6″ x 12″.		
26	Wrap items 6 through 8 (table A-18-2) in volatile paper (MIL-P-3420) (8135-985-7242), 6″ x 9″.		
27	Fold item (table A-18-2) and wrap in volatile paper (MIL-P-3420) (8135-985-7242), 8″ x 12″.		
28	Place items 4 through 9 (table A-18-2) in a barrier bag (MIL-B-131) (8135-282-0565), 9″ x 9″.		
29	Seal bag by heat sealing.		
30	Place item 10 (table A-18-2) in a barrier bag (MIL-B-131) (8135-282-0565), 9″ x 9″.		
31	Seal bag by heat sealing.		
32	Place items 1 through 14 (table A-18-2) in the box with the barrel assemblies and weapon.		
33	Close box and seal with pressure sensitive tape (PPP-T-60) (8135-890-9873) 2″ x 26″ (2 required).		
34	The following markings shall be applied to each unit container with ink, marking, stencil black (TT-I-559) (7510-161-0811): 1005-605-7710 Machine Gun, 7.62MM: M60 W/E 1 Each Preserved on (month-day-year) for a maximum of 180 days Gross Weight: 44.00 Cube: 2.393		
35	Assembly shipping container, 47½″ x 39½″ x 34″ for Bill of Material (table A-18-2) utilizing, 6D (FF-N-105) (5315-161-8607), 8D (FF-N-105) (5315-010-6507) and 16D (FF-N-105) (5315-010-6511) nails.		

Step	Function	Mech	Insp
36	Pack 15 machine guns boxes as unit packaged above in assembled shipping container, 47½″ x 39½″ x 34″.		
37	Secure lid with 8D nails (FF–N–105) (5315–010–6507).		
38	Apply steel strapping (QQ–S–781) (8135–283–0669), ¾″ x 163″ (3 required).		
39	Secure strapping with seals, ¾″ (8135–239–5293) (3 required).		
40	The following marking shall be applied to each shipping container with minimum size 1″ letters, using ink, marking, stencil, black (TT–I–559) (7510–161–0811) 1005–605–7710 Machine Gun, 7.62MM, M60 W/E 15 Each Preserved on (month-day-year) for a maximum of 180 days Gross Weight: 725.00 CUBE: 46.271		
41	Preparation instructions sheets shall be completed and placed in a waterproof envelope (MIL–B–131) (8135–282–0565) 10″ x 12″ and secured to the item/container in a conspicious location.		
	c. Deprocessing. Prior to placing this item in service, following receipt, deprocessing action will be in reverse of check list above.		

Table A–18–1. Packaging Materials List

FSN	Item description	Unit of use qty
1005–288–3565	Swab, Small Arms, Cleaning, 2½″ x 2½″, 1,000 Per Package	3 ea.
1005–336–0225	Tube, Bore,VCI Treated, .19 O.D. x 28½″	2 ea.
*1005–556–4174	Brush, Cleaning, Small Arms, Bore	1 ea.
*1005–690–3115	Brush, Cleaning, Small Arms, Chamber	1 ea.
**5315–010–6507	Nail, General Purpose (FF–N–105), 8D, 2⅜″ Long, 50 Pounds Per Carton	1 lb.
**5315–010–6511	Nail, General Purpose (FF–N–105), 16D, 3¼″ Long, 50 Pounds Per Carton	½ lb.
**5315–161–8607	Nail, General Purpose (FF–N–105), 6D, 1⅞″ Long, 50 Pounds Per Carton.	½ lb.
**5510–220–6078	Lumber, Soft Wood (MM–L–751), 1″ x 4″	7⅛ bf.
**5510–220–6226	Lumber, Soft Wood, 4 x 4 (MM–L–751)	13⅓ bf.
**5530–554–8709	Plywood, Soft Wood (NN–P–530), ¾″ x 48″ x 96″ Sheet	5 sf.
6850–285–8012	Solvent, Dry Cleaning (P–D–680), 55 Gallon Drum	1 pt.
6850–753–4806	Cleaning Compound Solvent (MIL–C–372), 55 Gallon Drum	1 pt.
7510–161–0811	Ink, Marking, Stencil, Black (TT–I–559), 1 Gallon Can	(***).
7920–205–3570	Rag,Wiping (DDD–R–30), 50 Pound Bale.	(***).
8135–132–9067	Fiberboard, Corrugated (PPP–F–320), 48″ x 96″ Sheet	14 sf.
**8135–239–5293	Seal, Strapping, Closed Type W/O Ears, ¾″, 1.7812 x 0.8075 Wide, 5,000 Per Box	3 ea.
8135–282–0565	Barrier Material,Water-Vaporproofed, Flexible (MIL–B–131), 36″ x 200 Yard Roll	3½ yd.
**8135–282–0565	Barrier Material,Water-Vaporproofed, Flexible (MIL–B–131), 36″ x 200 Yard Roll	⅓ yd.
**8135–283–0669	Strapping, Steel, Nailless (QQ–S–781), ¾″ x 0.023″, 100 Pound Coil	40¾ ft.
8135–855–6969	Cushioning Material, Cellulosic (PPP–C–843), ¾″ x 24″ x 167 Foot Package	8 ft.
8135–890–9873	Pressure Sensitive Tape (PPP–T–60), 2″ x 60 Yard Roll	3⅛ yd.
8135–985–7242	Paper, Volatile, Packaging (MIL–P–3420), 36″ x 100 Foot Roll	6 ft.
9150–281–2007	Corrosion, Preventative Compound, Lubricating Oil, General Purpose (VV–L–800), 55 Gallon Drum.	⅛ oz.
9310–160–7858	Board, Stencil (UU–S–625), 100 Sheets	(***).

*Material requirements for 20 machine guns.
**Material requirements for 15 machine guns.
***These items will be required in addition to the packaging materials listed above and will be used as needed.

Table A-18-2. Preservation for Basic Issue Items

Item No.	Item description	Qty reqd	Cleaning	Drying	Preservation	Container	Container size	Container class	Mech	Insp
1	Brush, Cleaning, Small Arms: Bore	4	C-1							
2	Brush Cleaning Small Arms Chamber	1	C-1							
3	Brush Cleaning Small Arms Receiver	1	C-1							
4	Extractor Ruptured Cartridge Case	1	C-3	D-1						
5	Wrench, Screwdriver and Reamer Combination	1	C-3	D-1						
6	Handle Assembly Cleaning Rod	1	C-3	D-1						
7	Rod Section Cleaning Small Arms	5	C-3	D-1						
8	Swab Holder Section Small Arms Cleaning Rod	1	C-3	D-1						
9	Sling Small Arms	1	C-1							
10	Magazine Assembly	1	C-1							
11	Case Carrying: Barrel Assembly and Equipment	1	C-1							
12	Lubricating Oil, Semi-fluid (MIL-L-46000A (LSA) 4 oz Flat Oval Bottle.	1	C-1							
13	Mitten, Cloth M1942 Asbestos	1	C-1							
14	Technical Manual TM 9-1005-224-10	1	C-1							

EXPLANATION OF CODES

C-1 Any applicable method not injurious to the item. Normally accomplished by wiping with a dry rag (DDD-R-30) (7920-205-3570).

C-3 Wipe or scrub item with a rag (DDD-R-30) (7920-205-3570) saturated with dry-cleaning solvent (P-D-680) (6850-285-8012), or dip in solvent and brush clean.

D-1 Wipe with clean rag (DDD-R-30) (7920-205-3570) to insure removal of solvent.

P-9 Apply a light coat of corrosion preventative compound, lubricating oil, general purpose (VV-L-800) (9150-281-2007) by dipping or brushing.

P-18 Wrap item with paper volatile corrosion inhibitor (MIL-P-3420) (8135-985-7242). Place dull side of material to the inside and foil side to outside.

P-19 Apply a light coat of corrosion preventive compound (MIL-C-16173) (8030-526-1604) by dipping or brushing. Allow to dry before handling.

NOTE

Containers:

E-Bag—Fabricated from (MIL-B-131) (8135-282-0565).

Box—Fabricated from (PPP-F-320) (8135-132-9067).

Bag closure—Heat seal.

Box closure—RSC Cartons: Seal the center seams of top and bottom with tape (PPP-T-60) (8135-890-9873). OPF Cartons: Seal the top center seam with tape (PPP-T-60) (8135-890-9873).

Bill of Materials

Name	No. req'd	Material	Dimensions	FSN
Ends	2	Plywood	39½" x 34" x ¾"	5530-554-8709
Sides	2	Plywood	50½" x 34" x ¾"	5530-554-8709
Top	1	Plywood	50½" x 41" x ¾"	5530-554-8709
Bottom	1	Plywood	50½" x 41" x ¾"	5530-554-8709
Skids	3	Wood	4" x 4" 41"	5510-220-6226
Cleats	4	Wood	1" x 4" x 33¾"	5510-220-6078
Cleats	4	Wood	1" x 4" 32⅛"	5510-220-6078

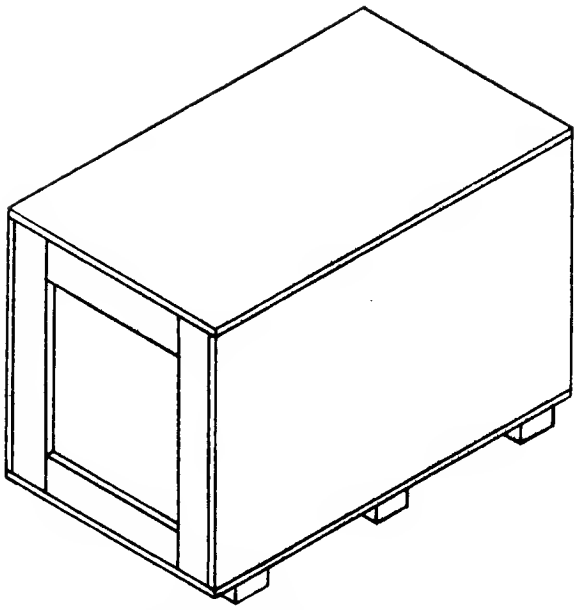

Figure A–18. Shipping Container.

APPENDIX A-19

PREPARATION INSTRUCTIONS FOR SHIPMENT: SURFACE VESSEL TRANSPORT

FSN	ITEM DESCRIPTION
☐ 1005-670-7670	Carbine, Caliber .30, M1, W/E.
☐ 1005-670-7675	Carbine, Caliber .30, M2, W/E.

PRESERVED: _____ (Month) _____ (Day) _____ (Year)

PRESERVED FOR A MAXIMUM OF 180 DAYS

NOTE:

Function: Relates to instructions to be accomplished in preparation of the equipment for shipment.

Mech: For initials of mechanic or responsible processing personnel to indicate function has been completed.

Insp: For initials of inspector certifying that function has been completed as indicated by the mechanic or processing personnel.

Step	Function	Mech	Insp
	a. Unit Responsibility.		
1	Assure that the weapon and equipment are in operating condition prior to movement to processing site.		
2	Certify that weapon, magazines and containers are free of ammunition.		
3	Deliver weapon, completed with tools and equipment to designated processing site.		
4	Unit Commander or representative will remain with weapons until acceptance by responsible preservation site personnel.		
	b. Cleaning, Preservation, Packaging, Packing and Marking.		
	WARNING		
	Before cleaning and packaging, BE SURE WEAPON IS CLEAR. Do not actuate trigger until weapon has been cleared. Inspect chamber to insure that it is empty and check to see that no ammunition is in position to be introduced. Avoid having live ammunition in vicinity of work area.		
1	Disassemble weapon as necessary in preparation for cleaning.		
2	Clean exterior surfaces of metal parts with a cleaning rag (DDD-R-30) (7920-205-3570), saturated with solvent cleaning compound (MIL-C-372) (6850-753-4806).		
3	Clean barrel bore, chamber and heavy contaminants of exterior surfaces with a snug fitting metallic bristle brushes (1005-556-4174) and (1005-690-8441) saturated with solvent cleaning compound (MIL-C-372) (6850-753-4806). Use rod furnished as "special tools".		
4	Further cleaning of metal parts shall be accomplished by complete immersion in dry-cleaning solvent (P-D-680) (6850-285-8012), accompanied by scrubbing and agitating or with a solvent saturated cleaning rag (DDD-R-30) (7920-205-3570).		
5	Rinse parts with clean dry-cleaning solvent (P-D-680) (6850-285-8012).		
6	Drain and dry cleaned parts with dry compressed air or with wiping rags (DDD-R-30) (7920-205-3570). The barrel bore and chamber shall be dried with cleaning swabs (1005-288-3565). All cleaned surfaces shall be dried prior to preservative application.		
7	Cleaning of canvas, webbing, synthetic materials, and wood shall be by any process or combination of processes which will accomplish thorough cleaning without damage to the item(s) (brushing, wiping, etc.).		

Step	Function	Mech	Insp
8	Apply general purpose lubricating oil (VV-L-800) (9150-281-2007), to all metallic surfaces by any applicable procedure. Excess oil shall be drained from weapon prior to unit packaging.		
9	Insert a VCI treated bore tube (1005-336-0225) into bore of barrel bending protruding portion over the muzzle end.		
10	Fold sling and wrap with a piece of volatile paper (MIL-P-3420) (8135-985-7242), 8″ x 12″.		
11	Wrap weapon with a piece of volatile paper (MIL-P-3420) (8135-985-7242), 18″ x 40″.		
12	Insert sling, and weapon in a barrier bag (MIL-B-131) (8135-282-0565), 12″ x 40″.		
13	Close bag by heat sealing.		
14	Wrap bagged weapon with cushioning material (PPP-C-843) (8135-855-6969), 18″ x 40″ (3 pcs.).		
15	Secure in place with pressure sensitive tape (PPP-T-60) (8135-890-9873), 2″ x 6″ (4 pcs. required).		
16	Position four (4) bag-cushioned weapons alternately within a corrugated fiberboard box (PPP-F-320) (8135-132-9067), 36½″ x 21½″ x 4½″.		
17	Cover weapons with cushioning material (PPP-C-843) (8135-855-6969), 22″ x 40″.		
18	Insert a piece of corrugated fiberboard (PPP-F-320) (8135-132-9067) 36″ x 21″ in container.		
19	Cover fiberboard with cushioning material (PPP-C-843) (8135-855-6969), 22″ x 40″.		
20	Clean, dry, preserve and package Basic Issue Items in accordance with Table A-19-2 and specified herein.		
21	Wrap magazines, item 2 (Table A-19-2), with volatile paper (MIL-P-3420) (8135-985-7242) 9″ x 9″ (7 pcs. required).		
22	Insert wrapped magazines in barrier bag (MIL-B-131) (8135-282-0565), 10″ x 12″.		
23	Close bag by heat sealing.		
24	Wrap items, 3, 4, 5, and 6 (Table A-19-2) with a piece of volatile paper, (MIL-P-3420) (8135-985-7242) 10″ x 10″.		
25	Place items 3 through 11 in a barrier bag (MIL-B-131) (8135-282-0565), 12″ x 12″.		
26	Close bag by heat sealing.		
27	Insert 4 sets of Basic Issue Items in container.		
28	Cover bagged items with cushioning material (PPP-C-843) (8135-855-6969), 22″ x 40″.		
29	Close and seal containers with pressure sensitive tape (PPP-T-60) (8135-890-9873), 2″ x 180″.		
30	The following marking shall be applied to each unit container with ink, marking, stencil, black (TT-I-559) (7510-161-0811). Federal Stock Number Item description 4 Each Preserved on (month-day-year) for a maximum of 180 days Gross Weight: 35.00 Cube: 2.37		
31	Assemble a shipping container 50″ x 44″ x 37″ (see Figure A-19-1) with 8D nails (FF-N-105) (5315-010-6507), 16D nails (FF-N-105) (5315-010-6511) and 6D nails (FF-N-105) (5315-161-8607).		
32	Place 20 carbine containers, unit packaged as above in shipping container.		
33	Secure lid with 8D nails (FF-N-105) (5315-010-6507).		
34	Apply steel strapping (QQ-S-781) (8135-283-0669) ¾″ x 178″ (3 pcs.).		
35	Secure strapping with seals (8135-239-5293) (3 required).		

Step	Function	Mech	Insp
36	The following marking shall be applied to each shipping container with minimum size 1″ letters using ink, marking, stencil, black (TT-I-559) (7510-161-0811). Federal Stock Number Item description 80 Each Preserved on (month-day-year) for a maximum of 180 days Gross Weight: 886.00 Cube: 57.662		
37	Preparation instructions sheet shall be completed and placed in a waterproof envelope (MIL-B-131) (8135-282-0565), size 10″ x 12″ and secured to the item/container in a conspicuous location.		
	c. Deprocessing. Prior to placing this item in service following receipt, deprocessing action will be in reverse of check list above.		

Table A-19-1. Packaging Materials List

FSN	Item description	Unit of use qty
1005-288-3565	Swab, Small Arms Cleaning, 2½″ x 2½″, 1,000 per package	3 ea.
1005-336-0225	Bore, Tube, VCI treated, .19 OD x 28½″	1 ea.
*1005-556-4174	Brush, Cleaning, Small Arms: Bore	1 ea.
*1005-690-8441	Brush, Cleaning, Small Arms: Chamber	1 ea.
***5315-010-6507	Nail, General Purpose (FF-N-105) 8D, 2⅜″ Lg., 50 pounds per earton	1 lb.
***5315-010-6511	Nail, General Purpose (FF-N-105), 16D, 3¼″ Lg., 50 pounds per earton	½ lb.
***5315-161-8607	Nail, General Purpose (FF-N-105), 6D, 1⅞″ Lg., 50 pounds per carton	⅛ lb.
***5510-220-6078	Lumber, Soft Wood (MM-L-751), 1″ x 4″	8 bf.
***5510-220-6226	Lumber, Soft Wood (MM-L-751), 4″ x 4″	15 bf.
5530-554-8709	Plywood, Soft Wood (NN-P-530) ¾″ x 48″ x 96″ sheet	83½ sf.
6850-285-8012	Solvent, Dry Cleaning (P-D-680) 55 gallon drum	1 pt.
6850-753-4806	Cleaning Compound Solvent (MIL-C-372), 55 gallon drum	1 pt.
7510-161-0811	Ink, Marking, Steneil, Blaek (TT-I-559), 1 gallon ean	(****).
7920-205-3570	Rag, Wiping (DDD-R-30), 50 pound bale	(****).
**8135-132-9067	Fiberboard, Corrugated (PPP-F-320) 48″ x 96″ sheet	27 sf.
***8135-239-5293	Seal, Strapping, Close Type W/O Ears, ¾″, 1.7812 x 0.8075 Wide 5000 per box	3 ea.
8135-282-0565	Barrier Material, Water-Vaporproofed Flexible (MIL-B-131) 36″ x 200 yard roll	1⅓ yd.
***8135-282-0565	Barrier Material, Water-Vaporproofed Flexible (MIL-B-131) 36″ x 200 yard roll	⅓ yd.
***8135-283-0669	Strapping, Steel, Nailless (QQ-S-781) ¾″ x 0.023″ 100 pound coil	46¾ ft.
8135-855-6969	Cushioning Material, Cellulosie (PPP C-843), ¾″ x 24″ x 167 foot package	9¾ ft.
**8135-855-6969	Cushioning Material, Cellulosie (PPP-C-843) ¾″ x 24″ x 167 foot package	27½ ft.
**8135-890-9873	Pressure sensitive tape (PPP-T-60) 2″ x 60 yard roll	¾ yd.
**8135-890-9873	Pressure Sensitive tape (PPP-T-60) 2″ x 60 yard roll	5 yd.
8135-985-7242	Paper, Volatile, Packaging (MIL-P-3420), 36″ x 100 foot roll	3½ ft.
9150-281-2007	Corrosion, Preventative Compound, Lubrieating Oil, General Purpose (VV-L-800), 55 gallon drum.	⅛ oz.
9310-160-7858	Board, Stencil (UU-S-625) 100 sh	(****).

*Material specified for 20 Carbines.
**Material specified for 4 Carbines.
***Material specified for 80 Carbines.
****These items will be required in addition to the packaging materials listed above and will be used as needed.

Table A-19-2. Preservation for Basic Issue Items

Item No.	Item description	Qty req'd	Cleaning	Drying	Preservative	Container	Container size	Container Class	Mech	Insp
1	Sling, Small Arms: M1 Webbing	1	C-1							
2	Magazine Cartridge	7	C-3	D-1						
3	Handle Assembly Cleaning Rod	1	C-3	D-1						
4	Swab Holder Section, Small Arms Cleaning Rod	1	C-3	D-1						
5	Rod Section Cleaning, Small Arms	3	C-3	D-1						
6	Oiler, Carbine	1	C-3	D-1						
7	Brush, Cleaning, Small Arms: Bore	1	C-1							
8	Brush, Cleaning, Small Arms: Chamber	1	C-1							
9	Cap, Magazine	6	C-1							
10	Buffer, Cleaning Rod	1	C-1							
11	Grease, Rifle, 5CC	1	C-1							

EXPLANATION OF CODES

C-1 Any applicable method not injurious to the item. Normally accomplished by wiping with a dry rag (DDD-R-30) (7920-205-3570).

C-3 Wipe or scrub item with a rag (DDD-R-30) (7920-205-3570) saturated with dry-cleaning solvent (P-D-680) (6850-285-8012), or dip in solvent and brush clean.

D-1 Wipe with clean rag (DDD-R-30) (7920-205-3570) to insure removal of solvent.

P-9 Apply a light coat of corrosion preventative compound, lubricating oil, general purpose (VV-L-800) (9150-281-2007) by dipping or brushing.

P-18 Wrap item with paper volatile corrosion inhibitor (MIL-P-3420) (8135-985-7242). Place dull side of material to the inside and foil side to outside.

P-19 Apply a light coat of corrosion preventive compound (MIL-C-16173) (8030-526-1604) by dipping or brushing. Allow to dry before handling.

NOTE

CONTAINERS:

E-Bag—Fabricated from (MIL-B-131) (8135-282-0565).

Box—Fabricated from (PPP-F-320) (8135-132-9067).

Bag closure—Heat Seal.

Box Closure—RSC Cartons: Seal the center seams of top and bottom with tape (PPP-T-60) (8135-890-9873). OPF Cartons: Seal the top center seam with tape (PPP-T-60) (8135-890-9873).

Bill of Materials

Name	Qty req'd	Material	Dimensions	FSN
Ends	2	Plywood	44″ x 37″ x ¾″	5530-554-8709
Sides	2	Plywood	53″ x 37″ x ¾″	5530-554-8709
Top	1	Plywood	53″ x 45½″ x ¾″	5530-554-8709
Bottom	1	Plywood	53″ x 45½″ x ¾″	5530-554-8709
Cleat	4	Wood	1″ x 4″ x 36¾″	5510-220-6078
Cleat	4	Wood	1″ x 4″ x 36⅝″	5510-220-6078
Skid	3	Wood	4″ x 4″ x 45½″	5510-220-6226

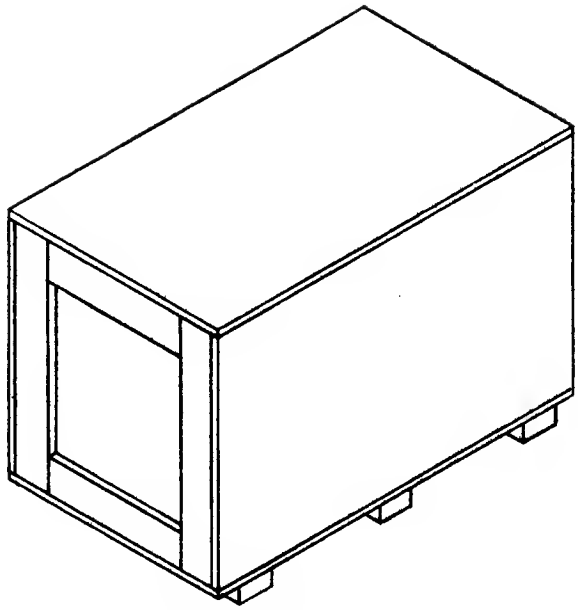

Figure A–19. Shipping Container.

APPENDIX A-20

PREPARATION INSTRUCTIONS FOR SHIPMENT: SURFACE VESSEL TRANSPORT

FSN	ITEM DESCRIPTION
☐ 1005–672–1643	Machinegun, Cal. .30 Browning M1919A4, Flexible W/E.

PRESERVED: _____ _____ _____
(Month) (Day) (Year)

PRESERVED FOR A MAXIMUM OF 180 DAYS

NOTE:

Function: Relates to instructions to be accomplished in preparation of the equipment for shipment.

Mech: For initials of mechanic or responsible processing personnel to indicate function has been completed.

Insp: For initials of inspector certifying that function has been completed as indicated by the mechanic or processing personnel.

Step	Function	Mech	Insp
	a. Unit Responsibility.		
1	Assure that weapon and equipment are in good operating condition.		
2	Certify that weapon is free of ammunition in gun barrels, magazines and containers.		
3	Deliver complete weapon to designated processing area.		
4	Unit Commander or representative, will remain with equipment, until acceptance by responsible preservation site personnel.		
	b. Cleaning, Preservation, Packaging, Packing and Marking.		
	WARNING		
	Before cleaning and packaging, BE SURE WEAPON IS CLEAR. Do not actuate trigger until weapon has been cleared. Inspect chamber to insure that it is empty and check to see that no ammunition is in position to be introduced. Avoid having live ammunition in vicinity of work area.		
1	Disassemble weapon as necessary to accomplish desired cleaning. Remove handle assembly operating slide for packaging purposes.		
2	Clean all metallic surfaces by wiping with rag (DDD–R–30) (7920–205–3570) saturated with cleaning solvent (MIL–C–372) (6850–753–4806).		
3	Clean both barrel bores and chambers with swabs (1005–288–3565) saturated with bore cleaner (MIL–C–372) (6850–753–4806).		
4	Clean surfaces of parts having burned powder residue with a metallic bristle (1005–556–4174) saturated with bore cleaner (MIL–C–372) (6850–753–4806). Use rod furnished as "special tools."		
5	After cleaning with (MIL–C–372) (6850–753–4806) rinse with a drycleaning solvent (P–D–680) (6850–285–8012).		
6	Drain and dry with compressed air or wiping rag (DDD–R–30) (7920–205–3570) changing drying position as necessary to accomplish thorough draining.		
7	Dry both barrels and chambers with swabs (1005–288–3565).		
8	All cleaned surfaces, of machinegun, shall be thoroughly dried prior to preservation.		
9	Preserve all metallic surfaces with preservation oil (VV–L–800) (9150–281–2007).		
10	Completely drain off excess oil prior to reassembly and packaging.		
11	Insert a bore tube volatile corrosion inhibitor (1005–336–0225) into each barrel bore extending tube 1″ beyond barrel end and crimp over.		
12	Wrap retracting slide handle assembly in paper volatile packaging (MIL–P–3420) (8135–985–7242) size 3″ x 5″.		

Step	Function	Mech	Insp
13	Wrap a piece of paper volatile packaging around barrel jacket (MIL–P–3420) (8135–985–7242) 4″ x 12″ to locate wrapped handle assembly.		
14	Secure wrapped handle assembly securely to wrapped barrel jacket with (PPP–T–60) (8135–890–9873) tape 2″ x 12″.		
15	Wrap extra gun barrel paper volatile inhibitor (MIL–P–3420) (8135–985–7242) 6″ x 26″.		
16	Wrap machinegun in paper volatile packaging (MIL–P–3420) (8135–985–7242) 24″ x 53″.		
17	Secure wrapped gun barrel to wrapped machinegun, immobilizing with filament reinforced pressure sensitive tape (PPP–T–97) (8135–582–4772) 1″ x 24″ (3 pieces required).		
18	Cushion wrapped machine gun with attached barrel, with cellulosic material (PPP–C–843) (8135–855–6969) 24″ x 53″.		
19	Secure cushioning with tape (PPP–T–60) (8135–890–9873) 1″ x 20″ (5 pieces required).		
20	Locate cushioned machinegun into a bag (MIL–B–131) (8135–282–0565) 14″ x 53″.		
21	Heat seal bag reducing the air volumn in the bag, to a practical minimum.		
22	Basic issue items shall be cleaned, dried, preserved and packaged, in accordance with Table A–20–2.		
23	Locate basic issue items, 1 thru 14, see Table A–20–2, in a bag (MIL–B–131) (8135–282–0565) 12″ x 20″.		
24	Heat seal BII bag.		
25	Fabricate a fiberboard box, 48⅞″ x 9″ x 6″, inside dimensions (8135–132–9067) (PPP–F–320).		
26	Cushioning material three (3) thicknesses (MIL–C–7769) (8135–132–9568) 6″ x 9″, shall be located in *EACH* end of the container.		
27	Cushioning Material (2) thicknesses 9″ x 43″ (MIL–C–7769) (8135–132–9568) shall be located in bottom of fiberboard container.		
28	Locate bagged and cushioned machinegun with bagged BII equipment in cushioned container.		
29	Locate (2) additional pieces of cushioning material 9″ x 43″ (MIL–C–7769) (8135–132–9568) on top of wrapped machinegun and BII equipment.		
30	Close container with (PPP–T–60) (8135–890–9873) tape 2″ x 51″ (2 pieces required).		
31	Apply three (3) girthwise straps of filament reinforced pressure sensitive tape (PPP–T–97) (8135–582–4772) 1″ x 36″ (3 pieces required).		
32	Apply the following information on each fiberboard container with stencil ink (TT–I–559) (7510–161–0811): 1005–672–1643 Machinegun, Cal. .30 1919A4 W/E 1 Each Preserved on (month-day-year) for a maximum of 180 days Gross weight: 49.00 Cube: 1.75		
33	Assemble exterior shipping container 50″ x 38¼″ x 32¾″ I.D. (see Figure A–20) with 8D nails (FF–N–105) (5315–010–6507) and apply skids with 10D nails (FF–N–105) (5315–010–6509).		
34	Pack (20) machineguns in assembled shipping container.		
35	Close container with 8D nails (FF–N–105) (5315–010–6507).		
36	Apply 3 steel straps girthwise around shipping container (QQ–S–781) (8135–283–0669) 157″ x ¾″ (3 required).		
37	Secure strapping with seals (8135–239–5293) (3 required).		

Step	Function	Mech	Insp
38	Apply the following marking in 1″ letters on cleated plywood box with stencil ink (TT–I–559) (7510–161–0811): 1005–672–1643 Machinegun Cal. .30 1919A4 W/E 20 Each Preserved on (month-day-year) for a maximum of 180 days Gross weight: 1,170 Cube: 46.231		
39	Preparation instructions sheets shall be completed and placed in a waterproof envelope (MIL–B–131) (8135–282–0565) 10″ x 12″ and secured to the item/container in a conspicuous location.		
	c. Deprocessing. Prior to placing this item in service, following receipt, deprocessing action will be in reverse of check list above.		

Table A–20–1. Packaging Materials List

FSN	Item description	Unit of use qty
1005–288–3565	Swab, Small Arms Cleaning, 2½″ x 2½″ 1,000 Per Package	10 ea.
1005–336–0225	Bore Tube, VCI treated, .19 OD x 28½″	1 ea.
*1005–556–4174	Brush, cleaning, Small Arms, Borc	1 ea.
*5315–010–6507	Nail, General Purpose (FF–N–105), 8D, 2⅜″ Long, 50 pounds per carton	1 lb.
*5315–010–6509	Nail, General Purpose (FF–N–105), 10D, 2⅞″ Long, 50 pounds per carton	½ lb.
*5510–220–6078	Lumber, Soft Wood (MM–L–751) 1″ x 4″	7½ bf.
*5510–220–6194	Lumber, Soft Wood (MM–L–751) 2″ x 4″	4 bf.
*5530–554–8709	Plywood, Soft Wood (NN–P–530) ¾″ x 48″ x 96″ Sheet	68 sf.
6850–285–8012	Solvent, Dry Cleaning (P–D–680) 55 Gallon Drum	1 pt.
6850–753–4806	Cleaning Compound Solvent (MIL–C–372) 55 Gallon Drum	1 pt.
7510–161–0811	Ink, Marking, Stencil, Black (TT–I–559) 1 Gallon Can	(**)
7920–205–3570	Rag, Wiping (DDD–R–30) 50 Pound Bale	(**)
8135–132–9067	Fiberboard, Corrugated (PPP–F–320) 48″ x 96″ Sheet	12¼ sf.
8135–132–9568	Cushioning, Bound Fiber (MIL–C–7769) 24″ x 72″ Sheet	5⅜ ft.
*8135–239–5293	Seal, Strapping, Closed Type W/O Ears ¾″, 1.7812 x 0.8075 Wide 5,000 Per Box	3 ea.
8135–282–0565	Barrier Material, Water-Vaporproofed, Flexible (MIL–B–131) 36″ x 200 Yard Roll	2¼ yd.
*8135–282–0565	Barrier Material, Water-Vaporproofed, Flexible (MIL–B–131) 36″ x 200 Yard Roll	⅓ yd.
*8135–283–0669	Strapping, Steel, Nailless (QQ–S–781) ¾″ x 0.023″, 100 Pound Coil	39 ft.
8135–582–4772	Filament-Reinforced Pressure Sensitive Tape (PPP–T–97) 1″ x 60 Yard Roll	5 yd
8135–855–6969	Cushioning Material, Cellulosic (PPP–C–843), ¾″ x 24″ x 167 Foot Package	4½ ft.
8135–890–9873	Pressure Sensitive Tape (PPP–T–60) 2″ x 60 Yard Roll	6 ft.
8135–985–7242	Paper, Volatile, Packaging (MIL–P–3420) 36″ x 100 Foot Roll	3½ ft.
9150–281–2007	Corrosion, Preventative Compound, Lubricating Oil, General Purpose (VV–L–800) 55 Gallon Drum.	1 pt.
9310–160–7858	Board, Stencil, UU–S–625 100 sh	(**)

*Material requirements for 20 machineguns.
**These items will be required in addition to the packaging materials listed above and will be used as needed.

Table A-20-2. Preservation for Basic Issue Items

Item No.	Item description	Qty req'd	Cleaning	Drying	Preservative	Container	Container size	Container class	Mech	Insp
1	Bore Brush Cleaning	4	C-1		None	Bag	3 x 5	E		
2	Chamber Brush Cleaning	1	C-1		None	Bag	3 x 5	E		
3	Buffer Cleaning Rod	1	C-1		None	Bag	2½ x 3	E		
4	Case Cleaning Rod	1	C-1		None	Bag	4 x 10	E		
5	Cover Machine Gun	1	C-1		None	Bag	10 x 12	E		
6	Cover, Spare Barrel	1	C-1		None	Bag	4 x 6	E		
7	Envelope, Spare Parts	1	C-1		None	Bag	4 x 6	E		
8	Extractor	1	C-1		P-9	Bag	2½ x 6	E		
9	Handle Assembly	1	C-1		P-9	Bag	6 x 10	E		
10	Handle Assembly	1	C-1		P-9	Bag	3 x 5	E		
11	Rod, Section Cleaning	5	C-1		P-9	Bag	2½ x 7	E		
12	Holder Cleaning Patch	1	C-1		P-9	Bag	2½ x 4	E		
13	Wrench Combination	1	C-1		P-9	Bag	3 x 10	E		
14	Tech. Manual	1	C-1		None	Bag	9 x 12	E		

EXPLANATION OF CODES

C-1 Any applicable method not injurious to the item. Normally accomplished by wiping with a dry rag (DDD-R-30) (7920-205-3570)

C-3 Wipe or scrub item with a rag (DDD-R-30) (7920-205-3570) saturated with dry cleaning solvent (P-D-680) (6850-285-8012), or dip in solvent and brush clean.

D-1 Wipe with clean rag (DDD-R-30) (7920-205-3570) to insure removal of solvent.

P-9 Apply a light coat of corrosion preventative compound, lubricating oil, general purpose (VV-L-800) (9150-281-2007) by dipping or brushing.

P-18 Wrap item with paper volatile corrosion inhibitor (MIL-P-3420) (8135-985-7242). Place dull side of material to the inside and foil side to outside.

P-19 Apply a light coat of corrosion preventive compound (MIL-C-16173) (8030-526-1604) by dipping or brushing. Allow to dry before handling.

NOTE

CONTAINERS:

E-Bag—Fabricated from (MIL-B-131) (8135-282-0565).
Box—Fabricated from (PPP-F-320) (8135-132-9067).
Bag closure—Heat seal.
Box closure—RSC Cartons: Seal the center seams of top and bottom with tape (PPP-T-60) (8135-890-9873).
OPF Cartons: Seal the top center seams with tape (PPP-T-60) (8135-890-9873).

Bill of Materials

Name	No. req'd	Material	Dimensions	FSN
Ends	2	Plywood	38¼'' x 32¾'' x ¾''	5530-554-8709
Cleats	4	Wood	1'' x 4'' x 32¾''	5510-220-6078
Cleats	4	Wood	1'' x 4'' x 31''	5510-220-6078
Sides	2	Plywood	53'' x 32¾'' x ¾''	5530-554-8709
Top	1	Plywood	53'' x 39¾'' x ¾''	5530-554-8709
Bottom	1	Plywood	53'' x 39¾'' x ¾''	5530-554-8709
Skids	3	Wood	4'' x 4'' x 39¾''	5530-554-8709

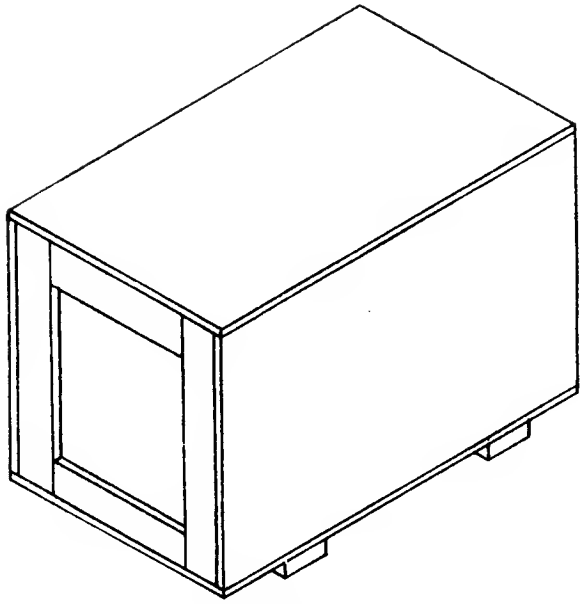

Figure A-20. Shipping Container.

APPENDIX A-21

PREPARATION INSTRUCTIONS FOR SHIPMENT: SURFACE VESSEL TRANSPORT

FSN	ITEM DESCRIPTION
☐ 1005-672-1649	Machine Gun Caliber .30 1919A6 W/E.

PRESERVED: _____ _____ _____
(Month) (Day) (Year)

PRESERVED FOR A MAXIMUM OF 180 DAYS

NOTE:

Function: Relates to instructions to be accomplished in preparation of the equipment for shipment.

Mech: For initials of mechanic or responsible processing personnel to indicate function has been completed.

Insp: For initials of inspector certifying that function has been completed as indicated by the mechanic or processing personnel.

Step	Function	Mech	Insp
	a. Unit Responsibility.		
1	Assure that weapon and equipment are in good operating condition.		
2	Certify that weapon is free of ammunition in gun barrels, magazines and containers.		
3	Deliver complete weapon to designated processing area.		
4	Unit Commander or representative will remain with equipment until acceptance by responsible preservation site personnel.		
	b. Cleaning, Preservation, Packaging, Packing and Marking.		
	WARNING Before cleaning and packaging, BE SURE WEAPON IS CLEAR. Do not actuate trigger until weapon has been cleared. Inspect chamber to insure that it is empty and check to see that no ammunition is in position to be introduced. Avoid having live ammunition in vicinity of work area.		
1	Disassemble weapon as necessary to accomplish cleaning. Remove shoulder piece and carrying handle and package individually.		
2	Clean all metallic surfaces by wiping with rag (DDD-R-30) (7920-205-3570) saturated with cleaning solvent (MIL-C-372) (6850-753-4806).		
3	Clean both barrel bores and chambers with swabs (1005-288-3565) saturated with bore cleaner (MIL-C-372) (6850-753-4806).		
4	Clean surfaces of parts having burned powder residue with a metallic brush (1005-556-4174) saturated with bore cleaner (MIL-C-372) (6850-753-4806). Use rod furnished as "special tools".		
5	After cleaning with (MIL-C-372) (6850-753-4806) rinse with a dry cleaning solvent (P-D-680) (6850-285-8012).		
6	Drain and dry with compressed air or wiping rag (DDD-R-30) (7920-205-3570) changing drying position as necessary to accomplish thorough draining.		
7	Dry both barrels and chambers with swabs (1005-288-3565).		
8	All cleaned surfaces of machine gun shall be thoroughly dried prior to preservation.		
9	Preserve all metallic surfaces with preservative oil (VV-L-800) (9150-281-2007).		
10	Completely drain off excess oil prior to reassembly and packaging.		

Step	Function	Mech	Insp
11	Insert a bore tube volatile corrosion inhibitor (1005–336–0225) into each barrel bore extending tube one inch beyond barrel end and crimp over.		
12	Fold the tripod to its smallest dimension. Locking into position by wrapping one (1) piece of paper volatile packaging (MIL–P–3420) (8135–985–7242) 6″ x 20″ around gun barrel and tripod.		
13	Secure paper volatile packaging (MIL–P–3420) (8135–985–7242) with two (2) pieces of filament reinforced pressure sensitive tape (PPP–T–97) (8135–582–4772) 1″ x 20″ applied girthwise around gun barrel and tripod.		
14	Wrap removed shoulder piece with paper volatile packaging (MIL–P–3420) (8135–985–7242) 14″ x 20″ secured with (PPP–T–60) (8135–890–9873) tape 2″ x 14″ (2 pieces).		
15	Wrap carrying handle with paper volatile inhibitor (MIL–P–3420) (8135–985–7242) 14″ x 14″.		
16	Wrap extra gun barrel in paper volatile inhibitor (MIL–P–3420) (8135–985–7242) 6″ x 26″.		
17	Wrap machine gun with barrel and tripod attached in paper, volatile packaging (MIL–P–3420) (8135–985–7242) 24″ x 53″.		
18	Secure extra gun barrel, shoulder piece and handle, carrying, to wrapped machine gun with barrel attached with filament reinforced pressure sensitive tape (PPP–T–97) (8135–582–4772) 1″ x 24″ (6 pieces required).		
19	Cushion wrapped machine gun with cellulosic material (PPP–C–843) (8135–855–6969) 24″ x 53″.		
20	Secure cushioning with tape (PPP–T–60) (8135–890–9873) 2″ x 20″ (5 pieces).		
21	Locate cushioned machine gun into a bag (MIL–B–131) (8135–282–0565) 14″ x 53″.		
22	Heat seal bag reducing the air volume in the bag to a practical minimum.		
23	Basic issue items shall be preserved and packaged as specified. See Table A–21–2.		
24	Locate items 1 thru 12, see Table A–21–2, into a bag (MIL–B–131) (8135–282–0565) 10″ x 20″.		
25	Heat seal bag.		
26	Fabricate fiberboard box 45⅞″ x 9″ x 6″ I.D. (PPP–F–320) (8135–132–9067).		
27	Cushioning material three (3) thicknesses, 6 x 9 x 1 shall be located in each end of the container (MIL–C–7769) (8135–132–9568).		
28	Cushioning material (2) thicknesses, 9″ x 39″ (MIL–C–7769) (8135–132–9568) shall be located in bottom of fiberboard container.		
29	Locate bagged and cushioned machine gun with bagged BII equipment in cushioned container.		
30	Locate 2 additional pieces cushioning material 9″ x 39″ (MIL–C–7769) (8135–132–9568) on top of wrapped machine gun and BII equipment.		
31	Close container with (PPP–T–60) (8135–890–9873) tape 2″ x 48″ (2 pieces required).		
32	Apply two girthwise straps of filament reinforced pressure sensitive tape (PPP–T–97) (8135–582–4772) 1″ x 36″ (2 pieces required).		
33	Apply the following information on each fiberboard container, with stencil, ink (TT–I–559) (7510–161–0811). 1005–672–1649 Machine Gun Caliber 1916A6 W/E 1 Each Preserved on (month-day-year) for a maximum of 180 days Gross weight: 50.50 Cube: 1.66		
34	Assemble exterior shipping container 46⅝″ x 38¼″ x 32¾″ (see Figure A–21) with 8D nails (FF–N–105) (5315–010–6507) and apply skids with 10D nails (FF–N–105) (5315–010–6509).		
35	Pack twenty machine guns in assembled shipping container.		

Step	Function	Mech	Insp
36	Close container with 8D nails (FF-N-105) (5315-010-6507).		
37	Apply two steel straps (QQ-S-781) (8135-283-0671), 160″ x 1¼″ (3 required) to container.		
38	Secure strapping with seals (8135-239-5294) (3 required).		
39	Apply the following marking in 1″ letters on cleated plywood box with stencil ink (TT-I-559) (7510-161-0811). 1005-672-1649 Machine Gun Caliber .30 1919A6 W/E 20 Each Preserved on (month-day-year) for a maximum of 180 days Gross weight: 1195 Cube: 43.236		
40	Preparation instructions sheets shall be completed and placed in a waterproof envelope (MIL-B-131) (8135-282-0565), 10″ x 12″ and secured to the item/container in a conspicuous location.		
	c. Deprocessing. Prior to placing this item in service, following receipt, deprocessing action will be in reverse of check list above.		

Table A-21-1. Packaging Materials List

FSN	Item description	Unit of use qty
1005-288-3565	Swab, Small Arms Cleaning, 2½″ x 2½″ Long	10 ea.
1005-336-0225	Bore, Tube, VCI Treated, .19 O.D. x 28½″ Long	2 ea.
*1005-556-4174	Brush, Cleaning, Small Arms, Bore	1 ea.
*5315-010-6507	Nail, General Purpose (FF-N-105), 8D, 2⅜″ Long, 50 Pounds Per Carton	1 lb.
*5315-010-6509	Nail, General Purpose (FF-N-105), 10D, 2⅞″ Long, 50 Pounds Per Carton	½ lb
*5510-220-6078	Lumber, Soft Wood, (MM-L-751), 1″ x 4″	7½ bf.
*5510-220-6194	Lumber, Soft Wood, (MM-L-751), 2″ x 4″	4 bf.
*5530-554-8709	Plywood, Soft Wood (NN-P-530) ¾″ x 48″ x 96″ Sheet	68 sf.
6850-285-8012	Solvent, Dry Cleaning (P-D-680) 55 Gallon Drum	1 pt.
6850-753-4806	Cleaning Compound Solvent (MIL-C-372) 55 Gallon Drum	1 pt.
7510-161-0811	Ink, Marking, Stencil, Black (TT-I-559), 1 Gallon Can	(**)
7920-205-3570	Rag, Wiping (DDD-R-30) 50 Pound Bale	(**)
8135-132-9067	Fiberboard, Corrugated (PPP-F-320) 48″ x 96″	12 sf.
8135-132-9568	Cushioning, Bound Fiber (MIL-C-7769) 24″ x 75 Foot Roll	6 ft.
*8135-239-5294	Seal, Strapping, 1¼″, 1000 Per Box	3 ea.
8135-282-0565	Barrier Material, Water-Vaporproofed Flexible (MIL-B-131), 36″ x 200 Yard Roll	2¼ yd.
*8135-282-0565	Barrier Material, Water-Vaporproofed Flexible (MIL-B-131), 36″ x 200 Yard Roll	⅓ yd.
*8135-283-0671	Strapping, Steel, Nailless (QQ-S-781), 1¼″ x .035″, 90 Pound Coil	42 ft.
8135-582-4772	Filament-Reinforced Pressure Sensitive Tape (PPP-T-97), 1″ x 60 Yard Roll	7⅛ yd.
8135-855-6969	Cushioning Material, Cellulosic (PPP-C-843), ¾″ x 24″ x 167 Foot Package	4½ ft.
8135-890-9873	Pressure Sensitive Tape (PPP-T-60) 2″ x 60 Yard Roll	6¼ yd.
8135-985-7242	Paper, Volatile, Packaging (MIL-P-3420) 36″ x 100 Foot Roll	4¾ ft.
9150-281-2007	Corrosion, Preventative Compound, Lubricating Oil, General Purpose (VV-L-800), 55 Gallon Drum.	1 pt.
9310-160-7858	Board, Stencil, UU-S-625 100 sh	(**)

*Material requirements for 20 machine guns.
**These items will be required in addition to the packaging materials listed above and will be used as needed.

Table A-21-2. Preservation for Basic Issue Items

Item No.	Item description	Qty req'd	Cleaning	Drying	Preservative	Container	Container size	Container class	Mech	Insp
1	Bore Brush Cleaning	4	C-1			Bag	3 x 5	E		
2	Chamber, Brush Cleaning	1	C-1			Bag	3 x 5	E		
3	Buffer, Cleaning Rod	1	C-1			Bag	2½ x 3	E		
4	Case, Cleaning Rod	1	C-1			Bag	4 x 10	E		
5	Cover, Spare Barrel	1	C-1			Bag	6 x 16	E		
6	Envelope, Spare Parts	1	C-1			Bag	4 x 6	E		
7	Extractor	1	C-1		P-9	Bag	2½ x 6	E		
8	Handle Ass'y	1	C-1		P-9	Bag	3 x 5	E		
9	Section Cleaning Rod	5	C-1		P-9	Bag	2½ x 7	E		
10	Holder Cleaning Patch	1	C-1		P-9	Bag	2½ x 4	E		
11	Wrench Comb	1	C-1		P-9	Bag	3 x 10	E		
12	Tech Manual	1	C-1			Bag	9 x 12	E		

EXPLANATION OF CODES

C-1 Any applicable method not injurious to the item. Normally accomplished by wiping with a dry rag (DDD-R-30) (7920-205-3570).

C-3 Wipe or scrub item with a rag (DDD-R-30) (7920-205-3570) saturated with dry-cleaning solvent (P-D-680) (6850-285 8012), or dip in solvent and brush clean.

D-1 Wipe with clean rag (DDD-R-30) (7920-205-3570) to insure removal of solvent.

P-9 Apply a light coat of corrosion preventativc compound, lubricating oil, general purpose (VV-L-800) (9150-281-2007) by dipping or brushing.

P-18 Wrap item with paper volatile corrosion inhibitor (MIL-P-3420) (8135-985-7242). Place dull side of material to thc inside and foil side to outside.

P-19 Apply a light coat of corrosion preventive compound (MIL-C-16173) (8030-526-1604) by dipping or brushing. Allow to dry before handling.

NOTE

CONTAINERS:

E-Bag—Fabricated from (MIL-B-131) (8135-282-0565).

Box—Fabricated from (PPP-F-320) (8135-132-9067).

Bag closure—Heat seal.

Box closure—RSC Cartons: Seal the center seams of top and bottom with tape (PPP-T-60) (8135-890-9873).

OPF Cartons: Seal the top center seam with tape (PPP-T-60) (8135-890-9873).

Bill of Materials

Name	Qty req'd	Material	Dimensions	FSN
Ends	2	Plywood	38¼'' x 32¾'' x ¾''	5530-554-8709
Cleats	4	Wood	1'' x 4'' x 32¾''	5510-220-6078
Cleats	4	Wood	1'' x 4'' x 31''	5510-220-6078
Sides	2	Plywood	49⅝'' x 32⅜'' x ¾''	5530-554-8709
Top	1	Plywood	49⅝'' x 39⅜'' x ¾''	5530-554-8709
Bottom	1	Plywood	49⅝'' x 39⅜'' x ¾''	5530-554-8709
Skids	3	Wood	4'' x 4'' x 39¾''	5510-220-6078

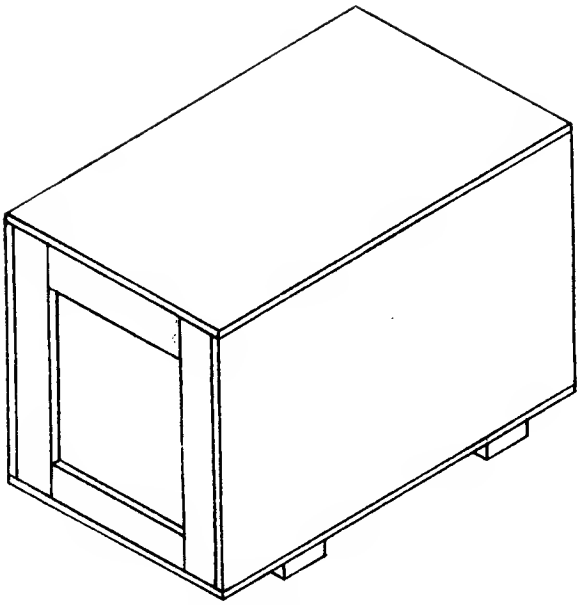

Figure A-21. Shipping Container.

APPENDIX A-22

PREPARATION INSTRUCTIONS FOR SHIPMENT: SURFACE VESSEL TRANSPORT

FSN	ITEM DESCRIPTION
☐ 1005-672-1767	Submachine Gun, Cal. .45 M3, W/E.

PRESERVED: _____ (Month) _____ (Day) _____ (Year)

PRESERVED FOR A MAXIMUM OF 180 DAYS

NOTE:

Function: Relates to instructions to be accomplished in preparation of the equipment for shipment.

Mech: For initials of mechanic or responsible processing personnel to indicate function has been completed.

Insp: For initials of inspector certifying that function has been completed as indicated by the mechanic or processing personnel.

Step	Function	Mech	Insp
	a. Unit Responsibility.		
1	Assure that weapon and equipment are in operating condition prior to movement to processing site.		
2	Certify that weapon, magazines, and containers are free of ammunition.		
3	Deliver weapon, complete with tools and equipment, to designated processing site.		
4	Unit Commander, or representative will remain with weapons until acceptance by responsible preservation site personnel.		
	b. Cleaning, Preservation, Packaging, Packing and Marking.		
	WARNING		
	Before cleaning and packaging, BE SURE WEAPON IS CLEAR. Do not actuate trigger until weapon has been cleared. Inspect chamber to insure that it is empty and check to see that no ammunition is in position to be introduced. Avoid having live ammunition in vicinity of work area.		
1	Disassemble weapon, as necessary, prior to cleaning.		
2	Clean barrel bore, chamber, and any parts subjected to burned powder residues with a metallic brush (1005-550-4036), saturated with solvent cleaning compound (MIL-C-372) (6850-753-4806). Use rod furnished as "special tools".		
3	Further cleaning of all metal parts shall be accomplished by complete immersion in solvent (P-D-680) (6850-285-8012), accompanied by scrubbing and agitation, or, with solvent saturated rags (DDD-R-30) (7920-205-3570).		
4	Rinse parts with clean solvent (P-D-680) (6850-285-8012).		
5	Drain, and dry clean parts with dry compressed air, or, with rags (DDD-R-30) (7920-205-3570).		
6	The barrel bore and chamber shall be dried with swabs (1005-288-3565).		
7	Cleaning of canvas, webbing, synthetic materials, and wood, shall be by any process, or combination of processes, which will accomplish thorough cleaning without damage to the item(s). Clean by brushing, wiping, etc.		
8	Reassemble weapon with the exception of the barrel, flash hider, magazine, and stock.		
9	Metallic surfaces of weapons shall be coated with corrosion preventative compound (VV-L-800) (9150-281-2007), applied by dipping.		

Step	Function	Mech	Insp
10	Drain excess oil from weapon changing draining position as necessary to accomplish thorough drainage.		
11	Insert a VCI treated bore tube (1005-336-0225) into barrel bore and bend protruding portion over the muzzle end.		
12	Wrap barrel and magazine with a piece of volatile paper (MIL-P-3420) (8135-985-7242), size 12″ x 12″.		
13	Insert stop plate of stock into the magazine slot of receiver.		
14	Wrap the receiver and stock with a piece of volatile paper (MIL-P-3420) (8135-985-7242), size 18″ x 18″.		
15	Place the wrapped barrel and magazine together with the wrapped receiver and stock into a fiberboard container (PPP-F-320) (8135-132-9067), size 13½″ x 7⅝″ x 3⅛″.		
16	Insert cushioning material (PPP-C-843) (8135-855-6969) 24″ x 24″, 2 pieces required, into the above container.		
17	Seal all seams and joints of container with tape (PPP-T-60) (8135-890-9873), 2″ x 76″.		
18	Clean, dry, preserve, and package basic issue items in accordance with table A-22-2, and as specified herein.		
19	Wrap items 1, 2, 3, 4 and 5 (table A-22-2) with a piece of volatile paper (MIL-P-3420) (8135-985-7242), size 12″ x 12″.		
20	Wrap item 6 (table A-22-2) with a piece of volatile paper (MIL-P-3420) (8135-985-7242), size 9″ x 9″.		
21	Wrap item 7 (table A-22-2) with a piece of volatile paper (MIL-P-3420) (8135-985-7242), size 24″ x 36″.		
	NOTE Place magazines in layers 4 wide prior to wrapping.		
22	Secure wrapped magazines with tape (PPP-T-60) (8135-890-9873), size 2″ x 36″.		
23	Wrap item 8 (table A-22-2) with a piece of barrier material (MIL-B-121) (8135-226-3124), size 12″ x 12″.		
	NOTE Nest 5 items together prior to wrapping.		
24	Secure wrapped items 8 (table A-22-2) with tape (PPP-T-60) (8135-890-9873), size 2″ x 12″.		
25	Place boxed weapon (step 16) and 1 set of packaged basic issue items into the unit container (PPP-F-320) (8135-132-9067), size 14¼″ x 8¼″ x 9¼″.		
26	Insert cushioning material (PPP-C-843) (8135-855-6969), size 12″ x 24″, into the unit container.		
27	Close unit container and seal all seams and joints with tape (PPP-T-60) (8135-890-9873), 2″ x 84″.		
28	The following marking shall be applied to each unit container with ink, marking, stencil, black (TT-I-559) (7510-161-0811): 1005-672-1767 Submachine Gun, Cal. .45, M3, W/E 1 Each Preserved on (month-day-year) for a maximum of 180 days Gross weight: 23.00 Cube: .727		
29	Assemble a shipping container, 29¾″ x 26½″ x 19¾″ (Figure A-22) with 8D nails (FF-N-105) (5315-010-6507), 10D nails (FF-N-105) (5315-010-6509) and 6D nails (FF-N-105) (5315-161-8607).		
30	Place 12 unit containers in shipping container.		
31	Secure lid with 8D nails (FF-N-105) (5315-010-6507).		

Step	Function	Mech	Insp
32	Apply steel strapping (QQ-S-781) (8135-283-0669), ¾″ x 122″ (2 required).		
33	Secure strapping with seals, ¾″ (8135-239-5293) (2 required).		
34	The following marking shall be applied to each shipping container with minimum size 1″ letters, using ink, marking, stencil, black (TT-I-559) (7510-161-0811): 1005-672-1767 Submachine Gun, Cal. .45, M3, W/E 12 Each Preserved on (month-day-year) for a maximum of 180 days Gross weight: 361.00 Cube: 12.67		
35	Preparation instructions sheets shall be completed and placed in a waterproof envelope (MIL-B-131) (8135-282-0565), 10″ x 12″ and secured to the item/container in a conspicuous location.		
	c. Deprocessing. Prior to placing the item in service following receipt, deprocessing action in reverse of check list must be completed.		

Table A-22-1. Packaging Materials List

FSN	Item description	Unit of use qty
1005-288-3565	Swab, Small Arms Cleaning, 2½″ x 2½″ 1,000 per Package	5 ea.
*1005-336-0225	Tube, Bore, VCI Treated, .19 O.D. x 28½″	1 ea.
**1005-550-4036	Brush, Cleaning	1 ea.
***5315-010-6507	Nail, General Purpose (FF-N-105) 8D, 2⅜″ Lg., 50 Pounds per Carton	½ lb.
***5315-010-6509	Nail, General Purpose (FF-N-105) 10D, 2⅞″ Lg., 50 Pounds per Carton	⅛ lb.
***5315-161-8607	Nail, General Purpose (FF-N-105) 6D, 1⅞″ Lg., 50 Pounds per Carton	½ lb.
***5510-220-6078	Lumber, Soft Wood (MM-L-751) 1″ x 4″	4⅓ bf.
***5510-220-6214	Lumber, Soft Wood (MM-L-751) 3″ x 4″	4¾ bf.
***5530-554-8709	Plywood, Soft Wood (NN-P-530) ¾″ x 48″ x 96″ Sheet	27½ sf.
6850-285-8012	Solvent, Dry Cleaning (P-D-680) 55 Gallon Drum	1 pt.
6850-753-4806	Cleaning Compound Solvent (MIL-C-372) 55 Gallon Drum	1 pt.
7510-161-0811	Ink, Marking, Stencil, Black (TT-I-559) 1 Gallon Can	(****)
7920-205-3570	Rag, Wiping (DDD-R-30) 50 Pound Bale	(****)
8135-132-9067	Fiberboard, Corrugated (PPP-F-320) 48″ x 96″ Sheet	9 sf.
8135-226-3124	Barrier Material, Greaseproof, Waterproof Flexible (MIL-B-121) 36″ x 200 Yard Roll	⅛ yd.
***8135-239-5293	Seal, Strapping, Closed Type W/O Ears, ¾″, 1.7812 x 0.8075 Wide, 5,000 per Box	2 ea.
***8135-282-0565	Barrier Material, Water-Vaporproofed, Flexible (MIL-B-131) 36″ x 200 Yard Roll	⅓ yd.
***8135-283-0669	Strapping, Steel, Nailless (QQ-S-781) ¾″ x 0.023″, 100 Pound Coil	34 ft.
8135-855-6969	Cushioning Material, Cellulosic (PPP-C-843) ¾″ x 24″ x 167 Foot Package	2 ft.
8135-890-9873	Pressure Sensitive Tape (PPP-T-60) 2″ x 60 Yard Roll	2 yd.
8135-985-7242	Paper, Volatile, Packaging (MIL-P-3420) 36″ x 100 Foot Roll	3½ ft.
9150-281-2007	Corrosion, Preventative Compound, Lubricating Oil, General Purpose (VV-L-800) 55 Gallon Drum.	1 pt.
9310-160-7858	Board, Stencil (UU-S-625) 100 sh	(****)

*Material requirements for 2 weapons.
**Material requirements for 5 weapons.
***Material requirements for 12 weapons.
****These items will be required in addition to the packaging materials listed above and will be used as needed.

Table A-22-2. Preservation for Basic Issue Items

Item No.	Item description	Qty req'd	Cleaning	Drying	Preservation	Container	Container size	Container class	Mech	Insp
1	Brush, Cleaning, Bore	1	C-3	(*)						
2	Oiler	1	C-1	D-1						
3	Brush, Cleaning, Chamber	1	C-3	(*)						
4	Flash Hider	1	C-3	D-1						
5	Filler, Magazine	1	C-3	D-1						
6	Sling	1	C-1	(*)						
7	Magazine Assy	15	C-3	D-1						
8	Cap, Magazine	15	C-1	D-1						

EXPLANATION OF CODES

C-1 Any applicable method not injurious to the item. Normally accomplished by wiping with a dry rag (DDD-R-30) (7920-205-3570).

C-3 Wipe or scrub item with a rag (DDD-R-30) (7920-205-3570) saturated with dry-cleaning solvent (P-D-680) (6850-285-8012), or dip in solvent and brush clean.

D-1 Wipe with clean rag (DDD-R-30) (7920-205-3570) to insure removal of solvent.

P-9 Apply a light coat of corrosion preventative compound, lubricating oil, general purpose (VV-L-800) (9150-281-2007) by dipping or brushing.

P-18 Wrap item with paper volatile corrosion inhibitor (MIL-P-3420) (8135-985-7242). Place dull side of material to the inside and foil side to outside.

P-19 Apply a light coat of corrosion preventive compound (MIL-C-16173) (8030-526-1604) by dipping or brushing. Allow to dry before handling.

(*) Dry by using dry, compressed air.

NOTE

CONTAINERS:

E-Bag—Fabricated from (MIL-B-131) (8135-282-0565).
Box—Fabricated from (PPP-F-320) (8135-132-9067).
Bag closure—Heat Seal.
Box closure—RSC Cartons: Seal the center seams of top and bottom with tape (PPP-T-60) (8135-890-9873).
OPF Cartons: Seal the top center seam with tape (PPP-T-60) (8135-890-9873).

Bill of Materials

Name	Qty req'd	Material	Dimensions	FSN
Ends	2	Plywood	26½" x 19¾" x ¾"	5530-554-8709
Sides	2	Plywood	32¾" x 19¾" x ¾"	5530-554-8709
Top	1	Plywood	32¾" x 28" x ¾"	5530-554-8709
Bottom	1	Plywood	32¾" x 28" x ¾"	5530-554-8709
Cleats	4	Wood	1" x 4" x 19⅝"	5510-220-6078
Cleats	4	Wood	1" x 4" x 19¼"	5510-220-6078
Skids	2	Wood	3" x 4" x 28"	5510-220-6214

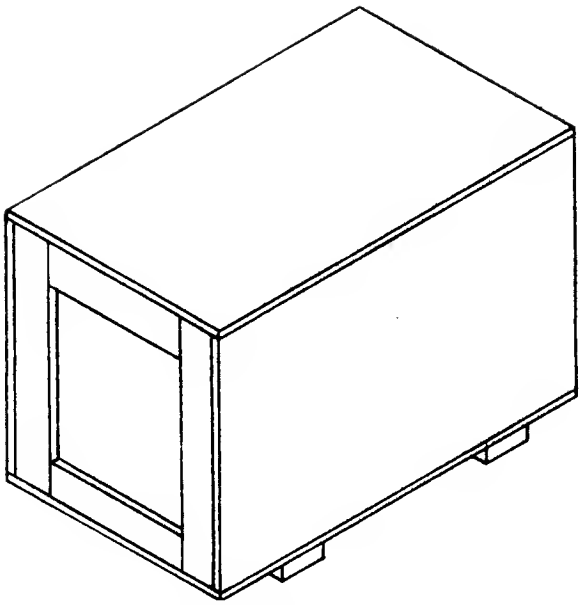

Figure A-22. Shipping container.

APPENDIX A-23

PREPARATION INSTRUCTIONS FOR SHIPMENT: SURFACE VESSEL TRANSPORT

FSN	ITEM DESCRIPTION
☐ 1005-672-1771	Submachine Gun, Caliber .45, M3A1, W/E.

PRESERVED: _____ _____ _____
(Month) (Day) (Year)

PRESERVED FOR A MAXIMUM OF 180 DAYS

NOTE:

Function: Relates to instructions to be accomplished in preparation of the equipment for shipment.

Mech: For initials of mechanic or responsible processing personnel to indicate function has been completed.

Insp: For initials of inspector certifying that function has been completed as indicated by the mechanic or processing personnel.

Step	Function	Mech	Insp
	a. Unit Responsibility.		
1	Assure that weapon and equipment are in operating condition prior to movement to processing site.		
2	Certify that weapon, magazine, and containers are free of ammunition.		
3	Deliver weapon, complete with tools and equipment, to designated processing site.		
4	Unit Commander or representative will remain with weapons until acceptance by responsible preservation site personnel.		
	b. Cleaning, Preservation, Packaging, Packing, and Marking.		
	WARNING Before cleaning and packaging, Be Sure Weapon Is Clear. Do not actuate trigger until weapon has been cleared. Inspect chamber to insure that it is empty and check to see that no ammunition is in position to be introduced. Avoid having live ammunition in vicinity of work area.		
1	Disassemble weapon as necessary, prior to cleaning.		
2	Clean barrel bore, chamber, and any parts subject to burned powder residues with a metallic brush (1005-550-4036) saturated with solvent cleaning compound (MIL-C-372) (6850-753-4806). Use rod furnished as "special tools".		
3	Further cleaning of all metal parts shall be accomplished by complete immersion in solvent (P-D-680) (6850-285-8012), accompanied by scrubbing and agitation, or with solvent saturated rags (DDD-R-30) (7920-205-3570).		
4	Rinse parts with clean solvent (P-D-680) (6850-285-8012).		
5	Drain and dry cleaned parts with dry compressed air, or with rags (DDD-R-30) (7920-205-3570).		
6	The barrel bore and chamber shall be dried with swabs (1005-288-3565).		
7	Cleaning of canvas, webbing, synthetic materials, and wood, shall be by any process, or combination of processes which will accomplish thorough cleaning without damage to the item(s). Clean by brushing, wiping, etc.		
8	Reassemble weapon with the exception of the barrel, flash hider, magazine, and stock.		
9	Metallic surfaces of weapons shall be coated with corrosion preventative compound (VV-L-800) (9150-281-2007), applied by dipping.		

Step	Function	Mech	Insp
10	Drain excess oil from weapon changing draining position as necessary to accomplish thorough drainage.		
11	Insert a VCI treated bore tube (1005-336-0216) into barrel bore and bend protruding portion over the muzzle end.		
12	Wrap barrel and magazine with a piece of volatile paper (MIL-P-3420) (8135-985-7242) size 12″ x 12″.		
13	Insert stop plate of stock into the magazine slot of receiver.		
14	Wrap the receiver and stock with a piece of volatile paper (MIL-P-3420) (8135-985-7242), 18″ x 18″.		
15	Place the wrapped barrel and magazine, together with the wrapped receiver and stock, into a fiberboard container (PPP-F-320) (8135-132-9067), 13½″ x 7⅝″ x 3⅛″.		
16	Insert cushioning material (PPP-C-843) (8135-855-6969), 24″ x 24″ (2 pieces required) into the above container.		
17	Seal the center seams of top and bottom of container with pressure sensitive tape (PPP-T-60) (8135-890-9873), 2″ x 16″ (2 pieces required).		
18	Clean, dry, preserve and package Basic Issue Items in accordance with table A-23-2, and as specified herein.		
19	Wrap items 1, 2, and 3 (table A-23-2) with a piece of volatile paper (MIL-P-3420) (8135-985-7242), 12″ x 12″.		
20	Wrap item 4 (table A-23-2) with a piece of volatile paper (MIL-P-3420) (8135-985-7242), 9″ x 9″.		
21	Wrap item 5 (table A-23-2) with a piece of volatile paper (MIL-P-3420) (8135-985-7242), 24″ x 36″.		
	NOTE Place magazines in layers, 4 wide, prior to wrapping.		
22	Secure wrapped magazines with tape (PPP-T-60) (8135-890-9873), 2″ x 36″.		
23	Wrap item 6 (table A-23-2) with a piece of barrier material (MIL-B-121) (8135-226-3124), 12″ x 12″.		
	NOTE Nest 5 items together prior to wrapping.		
24	Secure wrapped item 6 (table A-23-2) with tape (PPP-T-60) (8135-890-9873), 2″ x 12″.		
25	Place boxed weapon (step 16) and 1 set of packaged Basic Issue Items into the unit container (PPP-F-320) (8135-132-9067), 14¼″ x 8¼″ x 9¼″.		
26	Insert cushioning material (PPP-C-843) (8135-855-6969), 12″ x 24″, into the unit container.		
27	Close unit container by sealing center seams of top and bottom with tape (PPP-T-60) (8135-890-9873), 2″ x 17″ (2 pieces required).		
28	The following markings shall be applied to each unit container with ink, marking, stencil, black (TT-I-559) (7510-161-0811): 1005-672-1771 Submachine Gun, Caliber .45, M3 W/E 1 each Preserved on (month-day-year) for a maximum of 180 days Gross weight: 25.00 Cube: 0.727		
29	Assemble a shipping container, 29¾″ x 26½″ x 19¾″ (see fig. A-23) with 8D nails (FF-N-105) (5315-010-6507), 10D nails (FF-N-105) (5315-010-6509) and 6D nails (FF-N-105) (5315-161-8607).		
30	Place twelve (12) unit containers in shipping container.		
31	Secure lid with 8D nails (FF-N-105) (5315-010-6507).		

Step	Function	Mech	Insp
32	Apply steel strapping (QQ-S-781) (8135-283-0669), ¾″ x 122″ (2 required).		
33	Secure strapping with seals, ¾″ (8135-239-5293) (2 required).		
34	The following markings shall be applied to each shipping container with minimum size 1″ letters, using ink, marking, stencil, black (TT-I-559) (7510-161-0811): 1005-672-1767 Submachine Gun, Caliber .45, M3 W/E 12 each Preserved on (month-day-year) for a maximum of 180 days Gross weight: 385.00 Cube: 12.67		
35	Preparation instructions sheets shall be completed and placed in a waterproof envelope (MIL-B-131) (8135-282-0565), size 10″ x 12″ and secured to the item/container in a conspicuous location.		
	c. Deprocessing. Prior to placing the item in service following receipt, deprocessing action in reverse of checklist must be completed.		

Table A-23-1. Packing Materials List

FSN	Item description	Unit of use qty
1005-288-3565	Swab, Small Arms Cleaning, 2½″ x 2½″, 1,000 per Package	5 ea.
*1005-336-0216	Tube, Bore, VCI Treated, 0.19 O.D. x 28½″	1 ea.
**1005-550-4036	Brush, Cleaning	1 ea.
***5315-010-6507	Nail, General Purpose (FF-N-105), 8D, 2⅜″ Lg., 50 Pound Carton	½ lb.
***5315-010-6509	Nail, General Purpose (FF-N-105), 10D, 2⅞″ Lg., 50 Pound Carton	⅛ lb.
***5315-161-8607	Nail, General Purpose (FF-N-105), 6D, 1⅞″ Lg., 50 Pound Carton	½ lb.
***5510-220-6078	Lumber, Soft Wood (MM-L-751) 1″ x 4″	4⅓ bf.
***5510-220-6214	Lumber, Soft Wood (MM-L-751) 3″ x 4″	4¾ bf.
***5530-554-8709	Plywood, Soft Wood (NN-P-530) ¾″ x 48″ x 96″ Sheet	27½ sf.
6850-285-8012	Solvent, Dry Cleaning (P-D-680), 55 Gallon Drum	1 pt.
6850-753-4806	Cleaning Compound Solvent (MIL-C-372), 55 Gallon Drum	1 pt.
7510-161-0811	Ink, Marking, Stencil, Black (TT-I-559), 1 Gallon Can	(****)
7920-205-3570	Rag, Wiping (DDD-R-30), 50 Pound Bale	(****)
8135-132-9067	Fiberboard, Corrugated (PPP-F-320), 48″ x 96″ Sheet	9½ sf.
8135-226-3124	Barrier Material, Greaseproof, Waterproof Flexible (MIL-B-121), 36″ x 200 Yard Roll	⅛ yd.
***8135-239-5293	Seal, Strapping, Closed Type W/O Ears, ¾″, 1.7812 x 0.8075 Wide, 5,000 per Box	2 ea.
***8135-282-0565	Barrier Material, Greaseproof, Watervaporproof Flexible (MIL-B-131), 36″ x 200 Yard Roll	⅓ yd.
***8135-283-0669	Strapping, Steel, Nailless (QQ-S-781), ¾″ x 0.023″, 100 Pound Coil	21 ft.
8135-855-6969	Cushioning Material, Cellulosic (PPP-C-843), ¾″ x 24″ x 167 Foot per Package	5 ft.
8135-890-9873	Pressure Sensitive Tape (PPP-T-60), 2″ x 60 Yard Roll	3⅓ yd.
8135-985-7242	Paper, Volatile, Packaging (MIL-P-3420) 36″ x 100 Foot Roll	1¼ ft.
9150-281-2007	Corrosion, Preventative Compound, Lubricating Oil, General Purpose (VV-L-800), 55 Gallon Drum.	1 pt.
9310-160-7858	Board, Stencil, UU-S-625 100 sh	(****)

*Material Requirements for 2 weapons.
**Material Requirements for 5 weapons.
***Material Requirements for 24 weapons.
****These items will be required in addition to the packaging materials listed above and will be used as needed.

Table A-23-2. Preservation for Basic Issue Items

Step	Item description	Qty	Cleaning	Drying	Preserv-ative	Container	Container size	Container class	Mech	Insp
1	Brush, Bore	1	C-3	(*)						
2	Brush, Chamber	1	C-3	(*)						
3	Flash Hider	1	C-3	D-1						
4	Sling	1	C-1	(*)						
5	Magazine Assembly	15	C-3	D-1						
6	Cap, Magazine	15	C-1	D-1						

EXPLANATION OF CODES

C-1 Any applicable method not injurious to the item. Normally accomplished by wiping with a dry rag (DDD-R-30) (7920-205-3570).

C-3 Wipe or scrub item with a rag (DDD-R-30) (7920-205-3570) saturated with dry-cleaning solvent (P-D-680) (6850-285-8012), or dip in solvent and brush clean.

D-1 Wipe with clean rag (DDD-R-30) (7920-205-3570) to insure removal of solvent.

* Dry by using dry compressed air.

P-9 Apply a light coat of corrosion preventative compound, lubricating oil, general purpose (VV-L-800) (9150-281-2007) by dipping or brushing.

P-18 Wrap item with paper volatile corrosion inhibitor (MIL-P-3420) (8135-985-7242). Place dull side of materizl to the inside and foil side to outside.

P-19 Apply a light coat of corrosion preventive compound (MIL-C-16173) (8030-526-1604) by dipping or brushing. Allow to dry before handling.

NOTE

CONTAINERS:

E-Bag—Fabricated from (MIL-B-131) (8135-282-0565).
Box—Fabricated from (PPP-F-320) (8135-132-9067).
Bag closure—Heat seal.
Box closure—RSC Cartons: Seal the center seams of top and bottom with tape (PPP-T-60) (8135-890-9873). OPF Cartons: Seal the top center seam with tape (PPP-T-60) (8135-890-9873).

Bill of Materials

Name	No. req'd	Material	Dimensions	FSN
End	2	Plywood	26½" x 19¾" x ¾"	5530-554-8709
Side	2	Plywood	32¾" x 19¾" x ¾"	5530-554-8709
Top	1	Plywood	32¾" x 28" x ¾"	5530-554-8709
Bottom	1	Plywood	32¾" x 28" x ¾"	5530-554-8709
Vertical Cleat	4	Wood	1" x 4" x 19⅝"	5510-220-6078
Horizontal Cleat	4	Wood	1" x 4" x 19¼"	5510-220-6078
Skid	2	Wood	3" x 4" x 28"	5510-220-6214

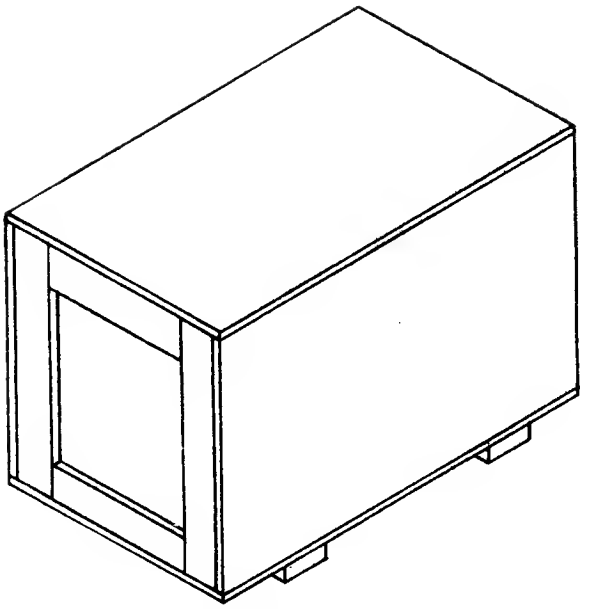

Figure A-23. Shipping container.

APPENDIX A-24

PREPARATION INSTRUCTIONS FOR SHIPMENT: SURFACE VESSEL TRANSPORT

FSN	ITEM DESCRIPTION
☐ 1005-673-3246	Mount, Machinegun: AA, Caliber .50 M63, W/E.

PRESERVED: _____ (Month) _____ (Day) _____ (Year)

PRESERVED FOR A MAXIMUM OF 180 DAYS

NOTE:

Function: Relates to instructions to be accomplished in preparation of the equipment for shipment.

Mech: For initials of mechanic or responsible processing personnel to indicate function has been completed.

Insp: For initials of inspector certifying that function has been completed as indicated by the mechanic or processing personnel.

Step	Function	Mech	Insp
	a. Unit Responsibility.		
1	Assure that mount is in operating condition.		
2	Deliver mount to designated processing site.		
3	Unit Commander or representative will remain with mounts until acceptance by responsible preservation site personnel.		
	b. Cleaning, Preservation, Packaging, Packing and Marking.		
1	Disassemble mount as necessary in preparation for cleaning.		
2	Clean all exposed unpainted or finished surfaces of metal parts with cleaning rags (DDD-R-30) (7920-205-3570) saturated with solvent cleaning compound (MIL-C-372) (6850-753-4806).		
3	Further cleaning of metal parts shall be accomplished by complete immersion in drycleaning solvent (P-D-680) (6850-285-8012) accompanied by scrubbing and agitation or with a solvent saturated cleaning rag (DDD-R-30) (7920-205-3570).		
4	Rinse parts with clean drycleaning solvent (P-D-680) (6850-285-8012).		
5	Drain and dry cleaned parts with dry compressed air or with wiping rag (DDD-R-30) (7920-205-3570). All cleaned parts shall be dried prior to preservation application.		
6	Apply general purpose lubricating oil (VV-L-800) (9150-281-2007) to all unpainted surfaces by any applicable procedure. Excess oil shall be drained prior to packaging.		
7	Reassemble mount with the exception of the leg assemblies and ammunition tray holder.		
8	Fold mount in a position to obtain the minimum cube.		
9	Wrap mount with a piece of volatile paper (MIL-P-3420) (8135-985-7242) 36″ x 72″.		
10	Alternate two (2) leg assemblies and wrap together with a piece of volatile paper (MIL-P-3420) (8135-985-7242), 24″ x 36″ (2 pcs. required).		
11	Wrap ammunition tray holder with a piece of volatile paper (MIL-P-3420) (8135-985-7242) 24″ x 36″.		
12	Assemble shipping container, 33¼″ x 22″ x 16½″ (see Figure A-24-1) utilizing 6D (FF-N-105) (5315-161-8607), and 8D (FF-N-105) (5315-010-6507) nails.		
13	Place a 33″ x 22″ piece of cushioning (MIL-C-7769) (8135-132-9568) in the bottom of container.		
14	Place wrapped leg assemblies on each side of box.		

Step	Function	Mech	Insp
15	Place a 33″ x 22″ piece of cushioning (MIL-C-7769) (8135-132-9568) on top of leg assemblies.		
16	Place wrapped mount on top of cushioning.		
17	Place wrapped ammunition tray holder in void beside Mount.		
18	Place a 33″ x 22″ piece of cushioning (MIL-C-7769) (8135-132-9568) on top of mount.		
19	Fold Base and Elevation Cover, Bearing Cover, Elevator Bottom Cover and Elevator Top Cover and place in container.		
20	Secure lid with 8D nails (FF-N-105) (5315-010-6507).		
21	The following marking shall be applied to each unit container with ink, marking, stencil, black (TT-I-559) (7510-161-0811): 1005-673-3246 Mount, Machinegun: AA, Caliber .50, M63, W/E 1 each Preserved on (month-day-year) for a maximum of 180 days Gross Weight: 230 Cube: 8.873		
22	Assemble a skid, 47″ x 36¼″ (see Figure A-24-2) with 8D nails (FF-N-105) (5315-010-6507).		
23	Place four (4) unit containers on skid.		
24	Place a 47″ x 36¼″ x ½″ plywood board (NN-P-530) (5530-618-6958) on top of containers.		
25	Apply four (4) steel strapping bands (QQ-S-781) (8135-283-0669) 2 lengthwise, size ¾″ x 180″ (2 required) and 2 girthwise size ¾″ x 140″ (2 required).		
26	Secure strapping with seals (8135-239-5293), 4 required.		
27	The following marking shall be applied to the plywood board on top of container with minimum size 1″ letters using ink, marking, stencil, black (TT-I-559) (7510-161-0811): 1005-673-3246 Mount, Machinegun: AA, CALIBER .50, M63, W/E 4 each Preserved on (month-day-year) for a maximum of 180 days Gross Weight: 1,000.00 Cube: 40.055		
28	Preparation instructions sheets shall be completed and placed in a waterproof envelope (MIL-B-131) (8035-282-0565), size 10″ x 12″ and secured to the item/container in a conspicuous location.		
	c. Deprocessing. Prior to placing this item in service following receipt, deprocessing action in reverse of checklist must be completed.		

Table A-24. Packaging Materials List

FSN	Item description	Unit of use qty
5315-010-6507	Nail, General Purpose (FF-N-105), 8D, 2⅜″ Long, 50 Pounds Per Carton	⅔ lb.
*5315-010-6507	Nail, General Purpose (FF-N-105), 8D, 2⅜″ Long, 50 Pounds Per Carton	⅓ lb.
5315-161-8607	Nail, General Purpose (FF-N-105), 6D, 1⅞″ Long, 50 Pounds Per Carton	¼ lb.
5510-220-6078	Lumber, Soft Wood (MM-L-751), 1″ x 4″	3¼ bf.
*5510-220-6078	Lumber, Soft Wood (MM-L-751), 1″ x 4″	7⅓ bf.
*5510-220-6194	Lumber, Soft Wood (MM-L-751), 2″ x 4″	6⅔ bf.
5530-554-8709	Plywood, Soft Wood (NN-P-530), ¾″ x 48″ x 96″ Sheet	38½ sf.
*5530-618-6958	Plywood, Soft Wood (NN-P-530), ½″ x 48″ x 96″ Sheet	23⅔ sf.
6850-285-8012	Solvent, Drycleaning (P-D-680), 55 Gallon Drum	1 pt.
6850-753-4806	Cleaning Compound Solvent (MIL-C-372) 55 Gallon Drum	1 pt.
7510-161-0811	Ink, Marking, Stencil, Black (TT-I-559) 1 Gallon Can	(**).
7920-205-3570	Rag, Wiping (DDD-R-30), 50 Pound Bale	(**).
8135-132-9568	Cushioning, Bound Fiber (MIL-C-7769) 24″ x 72″ Sheet	7½ ft.

APPENDIX A-24

PREPARATION INSTRUCTIONS FOR SHIPMENT: SURFACE VESSEL TRANSPORT

FSN	ITEM DESCRIPTION
☐ 1005-673-3246	Mount, Machinegun: AA, Caliber .50 M63, W/E.

PRESERVED: _____ (Month) _____ (Day) _____ (Year)

PRESERVED FOR A MAXIMUM OF 180 DAYS

NOTE:

Function: Relates to instructions to be accomplished in preparation of the equipment for shipment.

Mech: For initials of mechanic or responsible processing personnel to indicate function has been completed.

Insp: For initials of inspector certifying that function has been completed as indicated by the mechanic or processing personnel.

Step	Function	Mech	Insp
	a. Unit Responsibility.		
1	Assure that mount is in operating condition.		
2	Deliver mount to designated processing site.		
3	Unit Commander or representative will remain with mounts until acceptance by responsible preservation site personnel.		
	b. Cleaning, Preservation, Packaging, Packing and Marking.		
1	Disassemble mount as necessary in preparation for cleaning.		
2	Clean all exposed unpainted or finished surfaces of metal parts with cleaning rags (DDD-R-30) (7920-205-3570) saturated with solvent cleaning compound (MIL-C-372) (6850-753-4806).		
3	Further cleaning of metal parts shall be accomplished by complete immersion in drycleaning solvent (P-D-680) (6850-285-8012) accompanied by scrubbing and agitation or with a solvent saturated cleaning rag (DDD-R-30) (7920-205-3570).		
4	Rinse parts with clean drycleaning solvent (P-D-680) (6850-285-8012).		
5	Drain and dry cleaned parts with dry compressed air or with wiping rag (DDD-R-30) (7920-205-3570). All cleaned parts shall be dried prior to preservation application.		
6	Apply general purpose lubricating oil (VV-L-800) (9150-281-2007) to all unpainted surfaces by any applicable procedure. Excess oil shall be drained prior to packaging.		
7	Reassemble mount with the exception of the leg assemblies and ammunition tray holder.		
8	Fold mount in a position to obtain the minimum cube.		
9	Wrap mount with a piece of volatile paper (M1L-P-3420) (8135-985-7242) 36″ x 72″.		
10	Alternate two (2) leg assemblies and wrap together with a piece of volatile paper (M1L-P-3420) (8135-985-7242), 24″ x 36″ (2 pcs. required).		
11	Wrap ammunition tray holder with a piece of volatile paper (M1L-P-3420) (8135-985-7242) 24″ x 36″.		
12	Assemble shipping container, 33¼″ x 22″ x 16½″ (see Figure A-24-1) utilizing 6D (FF-N-105) (5315-161-8607), and 8D (FF-N-105) (5315-010-6507) nails.		
13	Place a 33″ x 22″ piece of cushioning (M1L-C-7769) (8135-132-9568) in the bottom of container.		
14	Place wrapped leg assemblies on each side of box.		

Step	Function	Mech	Insp
15	Place a 33″ x 22″ piece of cushioning (MIL-C-7769) (8135-132-9568) on top of leg assemblies.		
16	Place wrapped mount on top of cushioning.		
17	Place wrapped ammunition tray holder in void beside Mount.		
18	Place a 33″ x 22″ piece of cushioning (MIL-C-7769) (8135-132-9568) on top of mount.		
19	Fold Base and Elevation Cover, Bearing Cover, Elevator Bottom Cover and Elevator Top Cover and place in container.		
20	Secure lid with 8D nails (FF-N-105) (5315-010-6507).		
21	The following marking shall be applied to each unit container with ink, marking, stencil, black (TT-I-559) (7510-161-0811): 1005-673-3246 Mount, Machinegun: AA, Caliber .50, M63, W/E 1 each Preserved on (month-day-year) for a maximum of 180 days Gross Weight: 230 Cube: 8.873		
22	Assemble a skid, 47″ x 36¼″ (see Figure A-24-2) with 8D nails (FF-N-105) (5315-010-6507).		
23	Place four (4) unit containers on skid.		
24	Place a 47″ x 36¼″ x ½″ plywood board (NN-P-530) (5530-618-6958) on top of containers.		
25	Apply four (4) steel strapping bands (QQ-S-781) (8135-283-0669) 2 lengthwise, size ¾″ x 180″ (2 required) and 2 girthwise size ¾″ x 140″ (2 required).		
26	Secure strapping with seals (8135-239-5293), 4 required.		
27	The following marking shall be applied to the plywood board on top of container with minimum size 1″ letters using ink, marking, stencil, black (TT-I-559) (7510-161-0811): 1005-673-3246 Mount, Machinegun: AA, CALIBER .50, M63, W/E 4 each Preserved on (month-day-year) for a maximum of 180 days Gross Weight: 1,000.00 Cube: 40.055		
28	Preparation instructions sheets shall be completed and placed in a waterproof envelope (MIL-B-131) (8035-282-0565), size 10″ x 12″ and secured to the item/container in a conspicuous location.		
	c. Deprocessing. Prior to placing this item in service following receipt, deprocessing action in reverse of checklist must be completed.		

Table A-24. Packaging Materials List

FSN	Item description	Unit of use qty
5315-010-6507	Nail, General Purpose (FF-N-105), 8D, 2⅜″ Long, 50 Pounds Per Carton	⅔ lb.
*5315-010-6507	Nail, General Purpose (FF-N-105), 8D, 2⅜″ Long, 50 Pounds Per Carton	⅓ lb.
5315-161-8607	Nail, General Purpose (FF-N-105), 6D, 1⅞″ Long, 50 Pounds Per Carton	¼ lb.
5510-220-6078	Lumber, Soft Wood (MM-L-751), 1″ x 4″	3¼ bf.
*5510-220-6078	Lumber, Soft Wood (MM-L-751), 1″ x 4″	7⅓ bf.
*5510-220-6194	Lumber, Soft Wood (MM-L-751), 2″ x 4″	6⅔ bf.
5530-554-8709	Plywood, Soft Wood (NN-P-530), ¾″ x 48″ x 96″ Sheet	38½ sf.
*5530-618-6958	Plywood, Soft Wood (NN-P-530), ½″ x 48″ x 96″ Sheet	23⅔ sf.
6850-285-8012	Solvent, Drycleaning (P-D-680), 55 Gallon Drum	1 pt.
6850-753-4806	Cleaning Compound Solvent (MIL-C-372) 55 Gallon Drum	1 pt.
7510-161-0811	Ink, Marking, Stencil, Black (TT-I-559) 1 Gallon Can	(**).
7920-205-3570	Rag, Wiping (DDD-R-30), 50 Pound Bale	(**).
8135-132-9568	Cushioning, Bound Fiber (MIL-C-7769) 24″ x 72″ Sheet	7½ ft.

Table A-24. Packaging Materials List—Continued

FSN	Item description	Unit of use qty
*8135-239-5293	Seal, Strapping, Closed Type W/O Ears, ¾'', 1.7812 x 0.8075 Wide, 5,000 Per Box	4 ea.
*8135-282-0565	Barrier Material, Water-Vaporproofed, Flexible (MIL-B-131), 36'' x 200 Yard Roll	⅓ yd.
*8135-283-0669	Strapping, Steel, Nailless (QQ-S-781) ¾'' x 0.023'', 100 Pound Coil	54 ft.
8135-985-7242	Paper, Volatile, Packaging (MIL-P-3420) 36'' x 100 Foot Roll	11¾ ft.
9150-281-2007	Corrosion, Preventative Compound Lubricating Oil, General Purpose (VV-L-800) 55 Gallon Drum	1¼ oz.
9310-160-7858	Board, Stencil, UU-S-625 100 sh	(**).

*Material requirements for 4 mounts.
**These items will be required in addition to the packaging materials listed above and will be used as needed.

Bill of Materials

Name	Qty req'd	Material	Dimensions	FSN
Ends	2	Plywood	22'' x 16½'' x ¾''	5530-554-8709
Sides	2	Plywood	36¼'' x 16½'' x ¾''	5530-554-8709
Top	1	Plywood	36¼'' x 23½'' x ¾''	5530-554-8709
Bottom	1	Plywood	36¼'' x 23½'' x ¾''	5530-554-8709
Cleats	4	Wood	1'' x 4'' x 16¼''	5510-220-6078
Cleats	4	Wood	1'' x 4'' x 14¾''	5510-220-6078

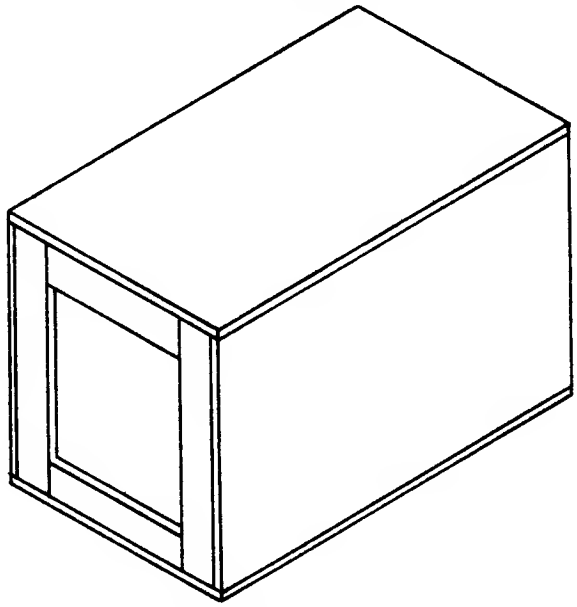

Figure A-24-1. Shipping Container

Bill of Materials

Name	Qty req'd	Material	Dimensions	FSN
Stringers	3	Wood	2'' x 4'' x 36¼''	5510-220-6194
Deck board	1	Plywood	47'' x 36¼''	5530-618-6598
Frame members	3	Wood	1'' x 4'' x 47''	5510-220-6078
Top	1	Plywood	47'' x 36¼''	5530-618-6598

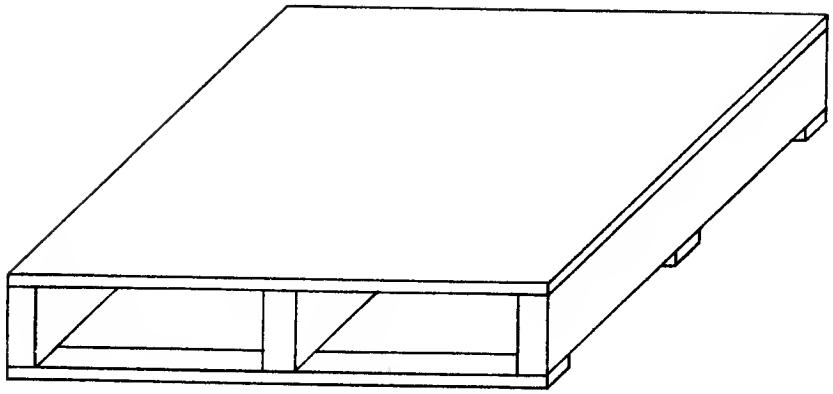

Figure A-24-2. Shipping Pallet.

APPENDIX A–25

PREPARATION INSTRUCTIONS FOR SHIPMENT: SURFACE VESSEL TRANSPORT

	FSN	ITEM DESCRIPTION
☐	1005–673–7955	Pistol, Cal. .45, M1911, W/E.

PRESERVED: _____ (Month) _____ (Day) _____ (Year)

PRESERVED FOR A MAXIMUM OF 180 DAYS

NOTE:

Function: Relates to instructions to be accomplished in preparation of the equipment for shipment.

Mech: For initials of mechanic or responsible processing personnel to indicate function has been completed.

Insp: For initials of inspector certifying that function has been completed as indicated by the mechanic or processing personnel.

Step	Function	Mech	Insp
	a. Unit Responsibility.		
1	Assure that weapon is in good operating condition.		
2	Certify that weapon, magazines and containers are free of ammunition and explosives.		
3	As directed, weapon, complete with tools and equipment will be delivered to designated processing site.		
4	Unit Commander, or representative, will remain with equipment until acceptance by responsible preservation site personnel.		
	b. Cleaning, Preservation, Packaging, Packing and Marking.		
	WARNING		
	Before cleaning and packaging, BE SURE WEAPON IS CLEAR. Do not actuate trigger until weapon has been cleared. Inspect chamber to insure that it is empty and check to see that no ammunition is in position to be introduced. Avoid having live ammunition in vicinity of work area.		
1	Disassemble weapon, as necessary, to accomplish thorough cleaning.		
2	Clean barrel bore, chamber, and any parts having heavy contaminants with a metallic brush (1005–550–4036) saturated with solvent, cleaning compound (MIL–C–372) (6850–753–4806). Use rod furnished as "special tools."		
3	Remove cleaner from bore and chamber using swabs, small arms, size 2½″ x 2½″ (1005–288–3565).		
4	Further cleaning of all surfaces shall be accomplished by complete immersion in, or by wiping with rags (DDD–R–30) (7920–205–3570) saturated with solvent, (P–D–680) (6850–285–8012) accompanied by scrubbing and agitation.		
5	Position parts to allow complete drainage.		
6	Rinse parts in clean solvent (P–D–680) (6850–285–8012) to remove residues.		
7	Drain and dry with compressed air, or wipe with rags (DDD–R–30) (7920–205–3570).		
8	Cleaning of canvas, webbing, synthetic materials and wood, shall be by any process which will accomplish thorough cleaning without damage to the item(s). Clean by brushing, wiping, etc.		
9	Reassemble weapon.		
10	Metallic surfaces of weapons shall be coated with corrosion preventative compound (VV–L–800) (9150–281–2007) applied by dipping.		

Step	Function	Mech	Insp
11	Drain excess oil from weapon changing draining position, as necessary, to accomplish thorough drainage.		
12	Wrap pistol with a 12″ x 18″ piece of paper, volatile (MIL–P–3420) (8135–985–7242).		
13	Place each wrapped pistol in a 10″ x 12″ bag (MIL–B–131) (8135–282–0565).		
14	Close bag by heat sealing.		
15	Place sealed bag in unit fiberboard box (PPP–F–320) (8135–132–9067) size, 10½″ x 6″ x 3½″.		
16	Clean magazines by immersion and agitation in solvent (P–D–680) (6850–285–8012).		
17	Dry magazines with compressed air, or by wiping with rags (DDD–R–30) (7920–205–3570).		
18	Overwrap magazine with paper, volatile (MIL–P–3420) (8135–985–7242) size, 6″ x 9″.		
19	Clean holster by wiping with rags (DDD–R–30) (7920–205–3570), or by using compressed air.		
20	Dry holster by wiping with rags (DDD–R–30) (7920–205–3570).		
21	Wrap all straps and thongs around body of holster.		
22	Wrap holster with barrier material (MIL–B–121) (8135–226–3124) size, 12″ x 16″.		
23	Secure wrap with tape (PPP–T–60) (8135–890–9873) 2″ x 4″ (3 pieces required).		
24	Place wrapped magazine and holster in the unit container, see Step 16.		
25	Fill void space of unit container with cushioning material (PPP–C–843) (8135–855–6969) size, 12″ x 12″.		
26	Seal center seams of container with tape (PPP–T–60) (8135–890–9873) size 2″ x 13″ (2 required).		
27	The following marking shall be applied to each unit container with ink, marking, stencil, black (TT–I–559) (7510–161–0811): 1005–673–7955 Pistol, Cal. .45, M1911, W/E 1 Each Preserved on (month-day-year) for a maximum of 180 days Gross weight: 4.00 Cube: .166		
28	Assemble cleated plywood shipping container, size 33¼″ x 26¼″ x 24⅜″ in accordance with Figure A–25 using 8D nails (FF–N–105) (5315–010–6507), 10D nails (FF–N–105) (5315–010–6509), and 6D nails (FF–N–105) (5315–161–8607).		
29	Place 72 unit packaged weapons W/E, in a shipping container (Figure A–25).		
30	Close shipping container with 8D nails (FF–N–105) (5315–010–6507).		
31	Secure shipping container with steel strapping (QQ–S–781) (8135–283–0669) ¾″ x 114″ long (3 pieces required).		
32	Secure strapping with seals (8135–239–5293) (3 required).		
33	The following marking shall be applied each to shipping container with minimum size 1″ letters using ink, marking, stencil, black (TT–I–559) (7510–161–0811): 1005–673–7955 Pistol, Cal. .45, M1911, W/E 72 Each Preserved on (month-day-year) for a maximum of 180 days Gross weight: 385.00 Cube: 16.58		
34	Preparation instructions sheets shall be completed and placed in a waterproof envelope (MIL–B–131) (8135–282–0565) 10″ x 12″ secured to the item/container in a conspicuous location.		
	c. Deprocessing. Prior to placing the item in service following receipt, deprocessing action, in reverse of checklist must be completed.		

Table A-25. Packaging Materials List

FSN	Item description	Unit of use qty
1005-288-3565	Swab, Small Arms Cleaning, 2½" x 2½" 1,000 Per Package	10 ea.
*1005-550-4036	Brush, Cleaning	1 ea.
**5315-010-6507	Nail, General Purpose (FF-N-105), 8D, 2⅜" Long, 50 Pounds Per Carton	½ lb.
**5315-010-6509	Nail, General Purpose (FF-N-105), 10D, 2⅞" long, 80 pounds per carton	⅛ lb.
**5315-161-8607	Nail, General Purpose (FF-N-105) 6D, 1⅞" long, 50 pounds per carton	½ lb.
**5510-220-6078	Lumber, Soft Wood (MM-L-751), 1" x 4"	5 bf.
**5510-220-6214	Lumber, Soft Wood (MM-L-751), 3" x 4"	4¾ bf.
**5530-554-8709	Plywood, Soft Wood (NN-P-530) ¾" x 48" x 96" sheet	35¼ sf.
6850-285-8012	Solvent, Dry Cleaning (P-D-680) 55 Gallon Drum	1 pt.
6850-753-4806	Cleaning Compound Solvent (MIL-C-372) 55 Gallon Drum	1 pt.
7510-161-0811	Ink, Marking, Stencil, Black (TT-I-559) 1 Gallon Can	(***)
7920-205-3570	Rag, Wiping (DDD-R-30), 50 Pound Bale	(***)
8135-132-9067	Fiberboard, Corrugated (PPP-F-320) 48" x 96" Sheet	2½ sf.
8135-226-3124	Barrier Material, Greaseproof Waterproof Flexible (MIL-B-121) 36" x 200 yard roll	¼ yd.
**8135-239-5293	Seal, Strapping, Closed Type W/O Ears, ¾", 1.7812 x 0.8075 Wide 5000 Per Box	3 ea.
8135-282-0565	Barrier Material, Water-Vaporproofed, Flexible (MIL-B-131), 36" x 200 Yard Roll	½ yd.
**8135-282-0565	Barrier Materiel Water-vaporproofed, Flexible (MIL-B-131) 36" x 200 Yard Roll	⅓ yd.
**8135-283-0669	Strapping, Steel, Nailless (QQ-S-781) ¾" x 0.023" 100 Pound Coil	38 ft.
8135-855-6969	Cushioning Material, Cellulosic (PPP-C-843), ¾" x 24" x 167 Foot Package	½ ft.
8135-890-9873	Pressure Sensitive Tape (PPP-T-60) 2" x 60 Yard Roll	2 yd.
8135-985-7242	Paper, Volatile, Packaging (MIL-P-3420), 36" x 100 Foot Roll	⅝ ft.
9150-281-2007	Corrosion, Preventative Compound, Lubricating Oil, General Purpose (VV-L-800), 55 Gallon Drum.	1 pt.
9310-160-7858	Board, Stencil, UU-S-625 100 sh	(***)

*Material requirements for 20 pistols W/E.
**Material requirements for 72 pistols W/E.
***These items will be required in addition to the packaging materials listed above and will be used as needed.

Bill of Materials

Name	No. req'd	Material	Dimensions	FSN
End	2	Plywood	26¼" x 24⅜" x ¾"	5530-554-8709
Side	2	Plywood	36¼" x 24⅜" x ¾"	5530-554-8709
Top	1	Plywood	36¼" x 27¾" x ¾"	5530-554-8709
Bottom	1	Plywood	36¼" x 27¾" x ¾"	5530-554-8709
Vertical Cleat	4	Wood	1" x 4" x 24¼"	5510-220-6078
Horizontal Cleat	4	Wood	1" x 4" x 19"	5510-220-6078
Skid	2	Wood	3" x 4" x 27¾"	5510-220-6214

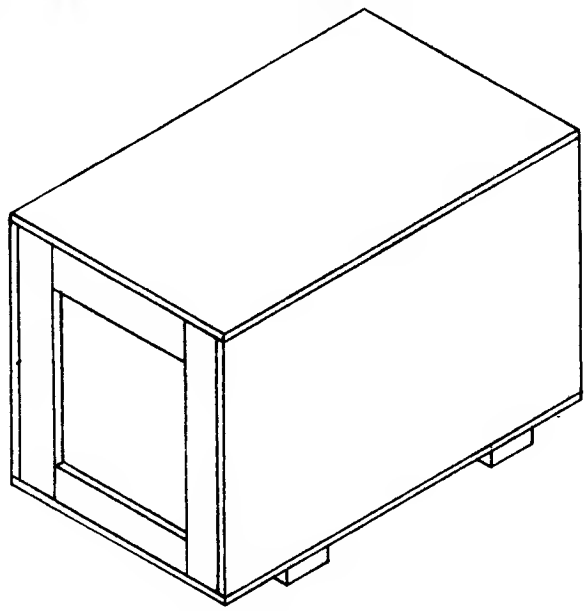

Figure A-25. Shipping Container.

APPENDIX A–26

PREPARATION INSTRUCTIONS FOR SHIPMENT: SURFACE VESSEL TRANSPORT

FSN	ITEM DESCRIPTION
☐ 1005–674–1309	Rifle, Caliber .30 Automatic Browning M1918, A2, W/E.

PRESERVED: _____ _____ _____
(Month) (Day) (Year)

PRESERVED FOR A MAXIMUM OF 180 DAYS

NOTE:

Function: Relates to instructions to be accomplished in preparation of the equipment for shipment.

Mech: For initials of mechanic or responsible processing personnel to indicate function has been completed.

Insp: For initials of inspector certifying that function has been completed as indicated by the mechanic or processing personnel.

Step	Function	Mech	Insp
	a. Unit Responsibility.		
1	Assure that the weapon is in operating condition prior to movement to processing site.		
2	Certify that weapon, magazine and container are free of ammunition.		
3	Deliver weapon, complete with tools and equipment, to designated processing site.		
4	Unit Commander or representative will remain with weapons until acceptance by responsible preservation site personnel.		
	b. Cleaning, Preservation, Packaging, Packing and Marking.		
	WARNING		
	Before cleaning and packaging, BE SURE WEAPON IS CLEAR. Do not actuate trigger until weapon has been cleared. Inspect chamber to insure that it is empty and check to see that no ammunition is in position to be introduced. Avoid having live ammunition in vicinity of work area.		
1	Disassemble weapon, as necessary, in preparation for cleaning. Remove bipod assembly and flash hider.		
2	Clean exterior surfaces of metal parts with a cleaning rag (DDD–R–30) (7920–205–3570), saturated with solvent cleaning compound (MIL–C–372) (6850–753–4806).		
3	Clean barrel bore, chamber and heavy contaminants of exterior metal surfaces with snug fitting bristle brushes, (1005–556–4174) and (1005–690–8441), saturated with solvent cleaning compound (MIL–C–372) (6850–753–4806). Use rod furnished as "special tools".		
4	Further cleaning of parts shall be accomplished by complete immersion in dry-cleaning solvent (P–D–680) (6850–285–8012), accompanied by scrubbing and agitation or with a solvent saturated wiping rag (DDD–R–30) (7920–205–3570).		
5	Rinse parts with clean dry-cleaning solvent (P–D–680) (6850–285–8012).		
6	Drain and dry cleaned parts with dry compressed air or with wiping rags (DDD–R–30) (7920–205–3570). The barrel bore and chamber shall be dried with cleaning swabs, (1005–288–3565). All cleaned surfaces shall be dried prior to preservative application.		
7	Apply general purpose lubricating oil (VV–L–800) (9150–281–2007), to all metallic surfaces by any applicable procedure. Excess oil shall be drained prior to packaging.		

Step	Function	Mech	Insp
8	Reassemble weapon except for bipod assembly and flash hider.		
9	Insert a VCI treated bore tube (1005–336–0225), into bore of barrel bending protruding portion over the muzzle end.		
10	Wrap weapon with a piece of volatile paper. (MIL–P–3420) (8135–985–7242) 18″ x 50″.		
11	Fold sling (item 28, table A–26–2) and wrap in volatile paper (MIL–P–3420) (8135–985–7242) 8″ x 12″.		
12	Insert wrapped sling and weapon minus bipod assembly and flash hider into a barrier bag (MIL–B–131) (8135–282–0565) 12″ x 50″.		
13	Close bag by heat sealing.		
14	Wrap bagged weapon with cushioning material (PPP–C–843) (8135–855–6969) 20″ x 50″.		
15	Secure wrap in place with pressure sensitive tape (PPP–T–60) (8135–890–9873) 2″ x 6″ (4 pieces required).		
16	Wrap Bipod Assembly with a piece of volatile paper (MIL–P–3420) (8135–985–7242) 18″ x 18″.		
17	Wrap Flash Hider with a piece of volatile paper (MIL–P–3420) (8135–985–7242) 6″ x 6″.		
18	Insert wrapped Bipod Assembly and Flash Hider in a barrier bag (MIL–B–131) (8135–282–0565) 8″ x 16″.		
19	Close bag by heat sealing.		
20	Position two (2) cushioned weapon with sling in a corrugated fiberboard box, (PPP–F–320) (8135–132–9067) 48″ x 13″ x 8″.		
21	Position two (2) bagged Bipod Assembly with Flash Hider into container.		
22	Clean, dry, preserve and package basic issue items in accordance with table A–26–2 and as specified herein.		
23	Wrap items 1 through 10 (table A–26–2) in volatile paper (MIL–P–3420) (8135–985–7242) 6″ x 18″.		
24	Place wrapped items 1 through 10 (table A–26–2) in a barrier bag (MIL–B–131) (8135–282–0565) 4″ x 18″.		
25	Close bag by heat sealing.		
26	Fold items 13 and 14 (table A–26–2).		
27	Place folded items 13 and 14 (table A–26–2) in a barrier bag (MIL–B–131) (8135–282–0565) 6″ x 6″.		
28	Close bag by heat sealing.		
29	Place items 15 through 17 (table A–26–2) in a barrier bag (MIL–B–131 (8135–282–0565) 4″ x 6″.		
30	Close bag by heat sealing.		
31	Wrap items 18 through 20 (table A–26–2) in volatile paper (MIL–P–3420) (8135–985–7242) 6″ x 9″.		
32	Place wrapped items 18 through 20 (table A–26–2) in a barrier bag (MIL–B–131) (8135–282–0565) 2½″ x 10″.		
33	Close bag by heat sealing.		
34	Line a corrugated fiberboard box (PPP–F–320) (8135–132–9067) 27′⅛′ x 7″ x 2¼″, with volatile paper (MIL–P–3420) (8135–985–7242) 20″ x 36″.		
35	Place item 21 (table A–26–2) in lined box and fold volatile paper (MIL–P–3420) (8135–985–7242) over item.		
36	Close box with pressure sensitive tape (PPP–T–60) (8135–890–9873) 2″ x 30″ (2 pieces required).		
37	Place boxed item 20 (table A–26–2) in a barrier bag. (MIL–B–131)(8135–282–0565) 12″ x 32″.		
38	Close bag by heat sealing.		
39	Basic issue items cleaned, dried, preserved and packaged as stated above and in table A–26–2 shall be placed in the box with the weapon. (1 set per weapon).		

Step	Function	Mech	Insp
40	Close box and seal with pressure sensitive tape (PPP-T-60) (8135-890-9873), 2″ x 50″ (2 pieces required).		
41	The following marking shall be applied to each unit container with ink, marking, stencil, black (TT-I-559) (7510-161-0811). 1005-674-1309 Rifle, Caliber .30, Automatic: Browning M1918A2, W/E 2 Ea Preserved on (month-day-year) for a maximum of 180 days Gross Weight: 80.00 Cube: 3.241		
42	Assemble shipping container, 49″ x 43″ x 28″ (see figure A-26), utilizing 6D (FF-N-105) (5315-161-8607), 8D (FF-N-105) (5315-010-6507) and 16D (FF-N-105) (5315-010-6511) nails.		
43	Pack 10 rifle boxes as unit packaged above in assembled shipping container.		
44	Secure lid with 8D nails (FF-N-105) (5315-010-6507).		
45	Apply strapping (QQ-S-781) (8135-283-0669) ¾″ x 160″ (3 pieces required).		
46	Secure strapping with seals (8135-239-5293) (3 required).		
47	The following marking shall be applied to each shipping container with minimum size 1″ letters using ink, marking, stencil, black (TT-I-559) (7510-161-0811). 1005-674-1309 Rifle, Caliber .30, Automatic: Browning M1918A2, W/E 20 Ea Preserved on (month-day-year) for a maximum of 180 days Gross Weight: 940.00 Cube: 44.337		
48	Preparation instructions sheets shall be completed and placed in a waterproof envelope (MIL-B-131) (8135-282-0565), size 10″ x 12″ and secured to the item/container in a conspicuous location.		
	c. Deprocessing. Prior to placing this item in service, following receipt, deprocessing action will be in reverse of check list above.		

Table A-26-1. Packaging Materials List

FSN	Item description	Unit of use qty
1005-288-3565	Swab, Small Arms Cleaning, 2½″ x 2½″, 1,000 per package	3 ea.
1005-336-0225	Tube, Bore, VCI Treated .19 O.D. x 28½″	1 ea.
*1005-556-4174	Brush, Cleaning, Small Arms: Bore	1 ea.
*1005-690-8441	Brush, Cleaning, Small Arms: Chamber	1 ea.
*5315-010-6507	Nail, General Purpose (FF-N-105) 8D 2⅜″ LG., 50 pound carton	1 lb.
*5315-010-6511	Nail, General Purpose (FF-N-105) 16D 3¼″ LG., 50 pound carton	½ lb.
*5315-161-8607	Nail, General Purpose (FF-N-105) 6D 1⅞″ LG., 50 pound carton	½ lb.
*5510-220-6078	Lumber, Soft Wood (MM-L-751) 1″ x 4″	7⅓ bf.
*5510-220-6226	Lumber, Soft Wood, 4 x 4 (MM-L-751)	15 bf.
*5530-554-8709	Plywood, Soft Wood (NN-P-530) ¾″ x 48″ x 96″ sheet	69 sf.
6850-285-8012	Solvent, Dry Cleaning (P-D-680) 55 gallon drum	1 pt.
6850-753-4806	Cleaning Compound Solvent (MIL-C-372) 55 gallon drum	1 pt.
7510-161-0811	Ink, Marking, Stencil, Black (TT-I-559) 1 gallon can	(***)
7920-205-3570	Rag, Wiping (DDD-R-30) 50 pound bale	(***)
**8135-132-9067	Fiberboard, Corrugated (PPP-F-320) 48″ x 96″ sheet	18½ sf.
8135-132-9067	Fiberboard, Corrugated (PPP-F-320) 48″ x 96″ sheet	4¾ sf.
*8135-239-5293	Seal, Strapping, Closed Type W/O Ears ¾″, 1.7812 x 0.8075 wide, 5,000 per box	3 ea.
8135-282-0565	Barrier Material, Water-Vaporproofed, Flexible (MIL-B-131) 36″ x 200 yard roll	2½ yd.
*8135-282-0565	Barrier Material, Water-Vaporproofed Flexible (MIL-B-131) 36″ x 200 yard roll	⅓ yd.

Table A-26.-1. Packaging Materials List—Continued

FSN	Item description	Unit of use qty
*8135-283-0669	Strapping Steel, Nailless (QQ-S-781) ¾" x 0.023", 100 pound coil	40 ft.
8135-855-6969	Cushioning Material, Cellulosic (PPP-C-843) ¾" x 24" x 167 foot package	3½ ft.
**8135-890-9873	Pressure Sensitive Tape (PPP-T-60) 2" x 60 yard roll	2¾ yd.
8135-890-9873	Pressure Sensitive Tape (PPP-T-60) 2" x 60 yard roll	2⅓ yd.
8135-985-7242	Paper, Volatile, Packaging 36" x 100 (MIL-P-3420) 36" x 100 foot roll	6 ft.
9150-281-2007	Corrosion, Preventative Compound Lubricating Oil, General Purpose (VV-L-800) 55 gallon drum.	1 pt.
9310-160-7858	Board, Stencil (UU-S-625) 100 sh	(***)

*Material requirements for 20 each rifles.
**Material requirements for 2 rifles.
***These items will be required in addition to the packaging materials listed above and will be used as needed.

Table A-26-2. Preservation for Basic Issue Items

Item No.	Nomenclature	Qty req'd	Cleaning	Drying	Preservative	Container	Container size	Container class	Mech	Insp
1	Extractor	1	C-3	D-1						
2	Pin, Firing	1	C-3	D-1						
3	Pin: retaining, gas cylinder tube	1	C-3	D-1						
4	Pin, Retaining, Trigger Guard	1	C-3	D-1						
5	Pin, Straight, Headless	2	C-3	D-1						
6	Spring: change and stop lever	1	C-3	D-1						
7	Spring, Extractor	1	C-3	D-1						
8	Spring, Helical, Compression	1	C-3	D-1						
9	Spring, Helical, Compression	1	C-3	D-1						
10	Spring, Sear	1	C-3	D-1						
11	Cover: front sight	1	C-3	D-1	P-18 5" x 5".	Bag	3" x 5"	E		
12	Extractor Ruptured Cartridge Case	1	C-3	D-1	P-18 3" x 5".	Bag	2½" x 6"	E		
13	Bag: Canvas, spare parts	1	C-1							
14	Case, Small Arms Cleaning Rod	1	C-1							
15	Brush, Cleaning, Small Arms: Bore	1	C-1							
16	Brush, Cleaning, Small Arms: M6 Chamber.	1	C-1							
17	Brush Set Cleaning, Small Arms: Chamber.	1	C-1							
18	Handle Assembly: cleaning rod	1	C-3	D-1						
19	Rod Section, Cleaning, Small Arms	5	C-3	D-1						
20	Swab Holder Section, Small Arms Cleaning Rod.	1	C-3	D-1						
21	Magazine, Cartridge	20	C-3	D-1						
22	Cap: Magazine	19	C-1			Bag	8" x 14"	E		
23	Envelope	1	C-1			Bag	4" x 6"	E		
24	Filler: magazine	1	C-3	D-1	P-18 9" x 9".	Bag	6" x 6"	E		
25	Handle: carrying	1	C-3	D-1	P-18 12"x12".	Bag	6" x 10"	E		
26	Reamer Assembly, Gas Cylinder Cleaner.	1	C-3	D-1	P-18 4" x 4".	Bag	3" x 5"	E		
27	Wrench, Combination	1	C-3	D-1	P-18 6" x 6".	Bag	4" x 6"	E		
28	Sling, Small Arms	1	C-1							

EXPLANATION OF CODES

C-1 Any applicable method not injurious to the item. Normally accomplished by wiping with a dry rag (DDD-R-30) (7920-205-3570).

C-3 Wipe or scrub item with a rag (DDD-R-30) (7920-205-3570) saturated with dry cleaning solvent (P-D-680) (6850-285-8012), or dip in solvent and brush clean.

D-1 Wipe with clean rag (DDD-R-30) (7920-205-3570) to insure removal of solvent.

P-9 Apply a light coat of corrosion preventative compound, lubricating oil, general purpose (VV-L-800) (9150-281-2007) by dipping or brushing.

P-18 Wrap item with paper volatile corrosion inhibitor (MIL-P-3420) (8135-985-7242). Place dull side of material to the inside and foil side to outside.

P-19 Apply a light coat of corrosion preventative compound (MIL-C-16173) (8030-526-1604) by dipping or brushing. Allow to dry before handling.

NOTE

CONTAINERS:

E-Bag—Fabricated from (MIL-B-131) (8135-282-0565).

Box—Fabricated from (PPP-F-320) (8135-132-9067).

Bag closure—Heat seal

Box closure—RSC Cartons: Seal the center seams of top and bottom with tape (PPP-T-60) (8135-890-9873). OPF Cartons: Seal the top center seam with tape (PPP-T-60) (8135-890-9873).

Bill of Materials

Name	No. Req'd	Material	Dimensions	FSN
Ends	2	Plywood	43″ x 28″ x ¾″	5530-554-8709
Sides	2	Plywood	52″ x 28″ x ¾″	5530-554-8709
Top	1	Plywood	52″ x 44½″ x ¾″	5530-554-8709
Bottom	1	Plywood	52″ x 44½″ x ¾″	5530-554-8709
Skids	3	Wood	4″ x 4″ x 44½″	5510-220-6226
Cleats	4	Wood	1″ x 4″ x 27¾″	5510-220-6078
Cleats	4	Wood	1″ x 4″ x 35⅝″	5510-220-6078

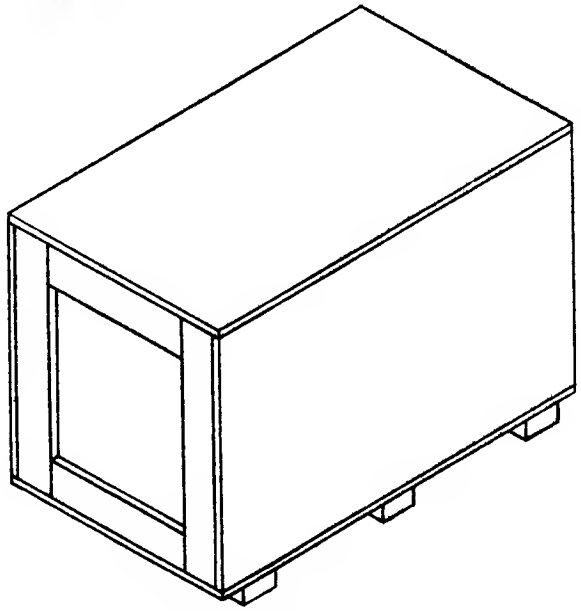

Figure A-26. Shipping Container

APPENDIX A-27

PREPARATION INSTRUCTIONS FOR SHIPMENT: SURFACE VESSEL TRANSPORT

FSN	ITEM DESCRIPTION
☐ 1005-674-1425	Rifle, Caliber .30, M1, W/E.

PRESERVED: _____ _____ _____
(Month) (Day) (Year)

PRESERVED FOR A MAXIMUM OF 180 DAYS

NOTE:

Function: Relates to instructions to be accomplished in preparation of the equipment for shipment.

Mech: For initials of mechanic or responsible processing personnel to indicate function has been completed.

Insp: For initials of inspector certifying that function has been completed as indicated by the mechanic or processing personnel.

Step	Function	Mech	Insp
	a. Unit Responsibility.		
1	Assure that weapon is in operating condition prior to movement to processing site.		
2	Certify that weapon and containers are free of ammunition.		
3	Deliver weapon, complete with tools and equipment, to designated processing site.		
4	Unit commander or representative will remain with weapons until acceptance by responsible preservation site personnel.		
	b. Cleaning, Preservation, Packaging, Packing and Marking.		
	WARNING Before cleaning and packaging, BE SURE WEAPON IS CLEAR. Do not actuate trigger until weapon has been cleared. Inspect chamber to insure that it is empty and check to see that no ammunition is in position to be introduced. Avoid having live ammunition in vicinity of work area.		
1	Disassemble weapon as necessary in preparation for cleaning.		
2	Clean exterior surfaces of metal parts with cleaning rags (DDD-R-30) (7920-205-3570), saturated with solvent cleaning compound (MIL-C-372) (6850-753-4806).		
3	Clean barrel bore, chamber and heavy contaminants of exterior metal surfaces with snug fitting bristle brushes (1005-556-4174 and 1005-690-8441), saturated with solvent cleaning compound (MIL-C-372) (6850-753-4806). Use rod furnished as "special tools".		
4	Further cleaning of parts shall be accomplished by complete immersion in drycleaning solvent (P-D-680) (6850-285-8012), accompanied by scrubbing and agitation or with a solvent-saturated cleaning rag (DDD-R-30) (7920-205-3570).		
5	Rinse parts with clean drycleaning solvent (P-D-680) (6850-285-8012).		
6	Drain and dry clean parts with dry compressed air or with wiping rags (DDD-R-30) (7920-205-3570). The barrel bore and chamber shall be dried with cleaning swabs (1005-288-3565). All cleaned surfaces shall be dried prior to preservation application.		
7	Apply general purpose lubricating oil (VV-L-800) (9150-281-2007), to all metallic surfaces by any applicable procedure. Excess oil shall be drained prior to packaging.		
8	Reassemble weapon.		
9	Insert a VCI treated bore tube (1005-336-0225), into bore of barrel bending protruding portion over the muzzle end.		

Step	Function	Mech	Insp
10	Wrap weapon with a piece of volatile paper (MIL–P–3420) (8135–985–7242), 18″ x 48″.		
11	Fold sling (Item 9, Figure A–27–2) and wrap in volatile paper (MIL–P–3420) (8135–985–7242) 8″ x 12″.		
12	Insert wrapped sling and weapon into a barrier bag (MIL–B–131) (8135–282–0565) 12″ x 50″.		
13	Close bag by heat sealing.		
14	Wrap bagged weapon with cushioning material (PPP–C–843)(8 135–855–6969), 18″ x 50″.		
15	Secure cushioning material with pressure sensitive tape (PPP–T–60) (8135–890–9873), 2″ x 6″ (4 pieces required).		
16	Position four (4) cushioned weapons with sling in a corrugated fiberboard box (PPP–F–320) (8135–132–9067), 45½″ x 21½″ x 3½″.		
17	Clean, dry, preserve and package basic issue items in accordance with Table A–27–2, and as specified herein.		
18	Wrap Items 5 thru 7 (Table A–27–2) in volatile paper (MIL–P–3420) (8135–985–7242), 6″ x 9″.		
19	Place Items 1 thru 8 (Table A–27–2) in a barrier bag (MIL–B–131) (8135–282–0565), 10″ x 12″.		
20	Close bag by heat sealing.		
21	Basic Issue Items, cleaned, dried, preserved and packaged, as stated above, and in Table A–27–2, shall be placed in the box with the weapon (1 set per weapon).		
22	Cover weapons and Basic Issue Items with cushioning material (PPP–C–843) (8135–855–6969), 21″ x 45″.		
23	Close box and seal with pressure sensitive tape (PPP–T–60) (8135–890–9873), 2″ x 50″ (2 pieces required).		
24	The following markings shall be applied to each unit container with ink, marking, stencil, black (TT–I–559) (7510–161–0811): 1005–674–1425 Rifle, Caliber .30, M1, W/E 4 Each Preserved on (month-day-year) for a maximum of 180 days Gross Weight: 53.00 Cube: 2.348		
25	Assemble a shipping container, 46½″ x 44½″ x 32½″ (see Figure A–27), utilizing nails, 6D (FF–N–105) (5315–161–8607), 8D (FF–N–105) (5315–010–6507), and 16D (FF–N–105) (5315–010–6511).		
26	Pack 16 rifle boxes, as unit packaged above, in assembled shipping container.		
27	Secure lid with 8D nails (FF–N–105) (5315–010–6507).		
28	Apply steel strapping (QQ–S–781) (8135–283–0669), ¾″ x 166″ (3 pieces required).		
29	Secure strapping with three (3) seals, ¾″ (8135–239–5293).		
30	The following markings shall be applied to each shipping container with minimum size 1″ letters using ink, marking, stencil, black (TT–I–559) (7510–161–0811): 1005–674–1425 Rifle, Caliber .30 M1, W/E 64 Each Preserved on (month-day-year) for a maximum of 180 days Gross Weight: 990.00 Cube: 49.579		

Step	Function	Mech	Insp
31	Preparation instructions sheets shall be completed and placed in a waterproof envelope (MIL-B-131) (8135-282-0565), 10″ x 12″ and secured to the item/container in a conspicuous location.		
	c. Deprocessing. Prior to placing this item in service, following receipt, deprocessing action will be in reverse of check list above.		

Table A-27-1. Packaging Materials List

FSN	Item description	Unit of use qty
1005-288-3565	Swab, Small Arms, Cleaning, 2½″ x 2½″, 1,000 per package	3 ea.
1005-336-0225	Tube, Bore, VCI Treated, .19 O.D. x 28½″	1 ea.
*1005-556-4174	Brush, Cleaning, Small Arms, Bore	1 ea.
*1005-690-8441	Brush, Cleaning, Small Arms, Chamber	1 ea.
***5315-010-6507	Nail, General Purpose (FF-N-105), 8D, 2⅜″ Lg., 50 Pounds per Carton	1 lb.
***5315-010-6511	Nail, General Purpose (FF-N-105), 16D, 3¼″ Lg., 50 Pounds per Carton	½ lb.
***5315-161-8607	Nail, General Purpose (FF-N-105), 6D, 1⅞″ Lg., 50 Pounds per Carton	½ lb.
***5510-220-6078	Lumber, Soft Wood (MM-L-751), 1″ x 4″	8 bf.
***5510-220-6226	Lumber, Soft Wood (MM-L-751), 4″ x 4″	15¾ bf.
***5530-554-8709	Plywood, Soft Wood (NN-P-530), ¾″ x 48″ x 96″ Sheet	73½ sf.
6850-285-8012	Solvent, Drycleaning (P-D-680), 55 Gallon Drum	1 pt.
6850-753-4806	Cleaning Compound Solvent (MIL-C-372), 55 Gallon Drum	1 pt.
7510-161-0811	Ink, Marking, Stencil, Black (TT-I-559) 1 Gallon Can	(****)
7920-205-3570	Rag, Wiping (DDD-R-30), 50 Pound Bale	(****)
**8135-132-9067	Fiberboard, Corrugated (PPP-F-320), 48″ x 96″ Sheet	24⅛ sf.
***8135-239-5293	Seal, Strapping, Closed Type W/O Ears, ¾″, 1.7812 x 0.8075 Wide, 5,000 per Box	3 ea.
8135-282-0565	Barrier Material, Water-Vaporproofed, Flexible (MIL-B-131), 36″ x 200 Yard Roll	1¼ yd.
***8135-282-0565	Barrier Material, Water-Vaporproofed, Flexible (MIL-B-131), 36″ x 200 Yard Roll	⅓ yd.
***8135-282-0669	Strapping, Steel, Nailless (QQ-S-781), ¾″ x 0.023″, 100 Pound Coil	41 ft.
8135-855-6969	Cushioning Material, Cellulosic (PPP-C-843), ¾″ x 24″ x 167 Foot Package	3¼ ft.
**8135-855-6969	Cushioning Material, Cellulosic (PPP-C-843), ¾″ x 24″ x 167 Foot Package	3¼ ft.
8135-890-9873	Pressure Sensitive Tape (PPP-T-60) 2″ x 60 Yard Roll	⅔ yd.
**8135-890-9873	Pressure Sensitive Tape (PPP-T-60), 2″ x 60 Yard Roll	2¾ yd.
8135-985-7242	Paper, Volatile, Packaging (MIL-P-3420), 36″ x 100 Foot Roll	2⅓ ft.
9150-281-2007	Corrosion, Preventative Compound, Lubricating Oil, General Purpose, (VV-L-800), 55 Gallon Drum.	1¼ oz.
9310-160-7858	Board, Stencil, UU-S-625 100 sh	(****)

*Material requirements for 20 rifles.
**Material requirements for 4 rifles.
***Material requirements for 64 rifles.
****These items will be required in addition to the packaging materials listed above and will be used as needed.

Table A-27-2. Preservation for Basic Issue Items.

Item	Item description	Qty req'd	Cleaning	Drying	Preservative	Container	Container size
1	Brush, Cleaning, Small Arms: Bore	1	C-1				
2	Brush, Cleaning, Small Arms: Chamber	1	C-1				
3	Case, Small Arms Cleaning Rod	1	C-1				
4	Case, Lubricant	1	C-1				
5	Handle Assembly: Cleaning rod	1	C-3	D-1			
6	Rod Section, Cleaning, Small Arms	4	C-3	D-1			
7	Swab Holder Section, Small Arms Cleaning Rod	1	C-3	D-1			
8	Buffer, Cleaning Rod	1	C-1				
9	Sling, Small Arms: M1 webbing	1	C-1				

EXPLANATION OF CODES

C-1. Any applicable method not injurious to the item. Normally accomplished by wiping with a dry rag (DDD-R-30) (7920-205-3570).

C-3. Wipe or scrub item with a rag (DDD-R-30) (7920-205-3570) saturated with drycleaning solvent (P-D-680) (6850-285-8012), or dip in solvent and brush clean.

D-1. Wipe with clean rag (DDD-R-30) (7920-205-3570) to insure removal of solvent.

P-9. Apply a light coat of corrosion preventative compound, lubricating oil, general purpose (VV-L-800) (9150-281-2007) by dipping or brushing.

P-18. Wrap item with paper volatile corrosion inhibitor (MIL-P-3420) (8135-985-7242). Place dull side of material to the inside and foil side to outside.

P-19. Apply a light coat of corrosion preventive compound (MIL-C-16173) (8030-526-1604) by dipping or brushing. Allow to dry before handling.

NOTE

CONTAINERS:

E-Bag—Fabricated from (MIL-B-131) (8135-282-0565).
Box—Fabricated from (PPP-F-320) (8135-132-9067).
Bag closure—Heat Seal.
Box closure—RSC Cartons: Seal the center seams of top and bottom with tape (PPP-T-60) (8135-890-
Box closure—RSC Cartons: Seal the center seams of top and bottom with tape (PPP-T-60) (8135-890-
9873). OPF Cartons: Seal the top center seam with tape (PPP-T-60) (8135-890-9873).

Bill of Materials

Name	Qty req'd	Material	Dimensions	FSN
Ends	2	Plywood	44½'' x 32½'' ¾''	5530-554-8709
Sides	2	Plywood	49½'' x 32½'' x ¾''	5530-554-8709
Top	1	Plywood	49½'' x 46'' x ¾''	5530-554-8709
Bottom	1	Plywood	49½'' x 46'' x ¾''	5530-554-8709
Skids	3	Wood	4'' x 4'' x 46''	5510-220-6226
Cleats	4	Wood	1'' x 4'' x 32¼''	5510-220-6078
Cleats	4	Wood	1'' x 4'' x 37⅛''	5510-220-6078

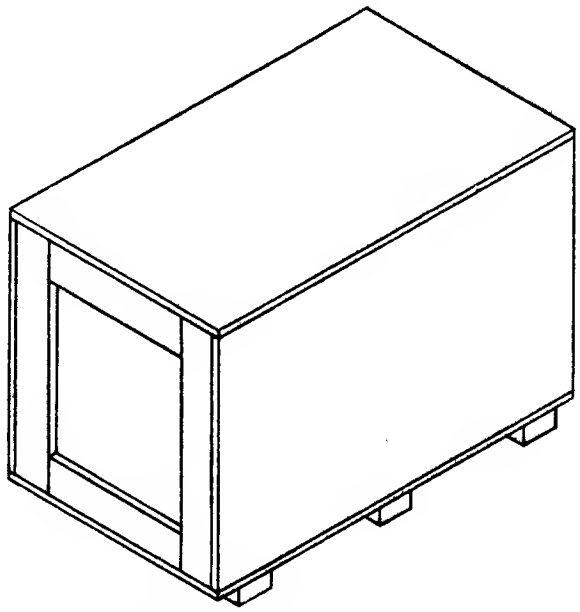

Figure A-27. Shipping Container.

APPENDIX A-28

PREPARATION INSTRUCTIONS FOR SHIPMENT: SURFACE VESSEL TRANSPORT

FSN	ITEM DESCRIPTION
☐ 1005-677-9130	Shotgun, 12-Gage, Riot type, M520A, W/E.
☐ 1005-677-9140	Shotgun, 12-Gage, Riot type, Stevens, M620A, W/E.
☐ 1005-677-9150	Shotgun, 12-Gage, Riot type, Winchester, M1912, W/E.

PRESERVED: _____ (Month) _____ (Day) _____ (Year)

PRESERVED FOR A MAXIMUM OF 180 DAYS

NOTE:

Function: Relates to instructions to be accomplished in preparation of the equipment for shipment.

Mech: For initials of mechanic or responsible processing personnel to indicate function has been completed.

Insp: For initials of inspector certifying that function has been completed as indicated by the mechanic or processing personnel.

Step	Function	Mech	Insp
	a. Unit Responsibility.		
1	Assure that weapon is in operating condition prior to movement to processing site.		
2	Certify that weapon and containers are free of ammunition.		
3	Deliver weapon, complete with tools and equipment, to designated processing site.		
4	Unit Commander or representative will remain with weapons until acceptance by responsible preservation site personnel.		
	b. Cleaning, Preservation, Packaging, Packing, and Marking.		
	WARNING Before cleaning and packaging, BE SURE WEAPON IS CLEAR. Do not actuate trigger until weapon has been cleared. Inspect chamber to insure that it is empty and check to see that no ammunition is in position to be introduced. Avoid having live ammunition in vicinity of work area.		
1	Disassemble weapon, as necessary, in preparation for thorough cleaning.		
2	Clean exterior surfaces of metal parts with rags (DDD-R-30) (7920-205-3570), saturated with cleaning solvent compound (MIL-C-372) (6850-753-4806).		
3	Clean barrel bore, chamber and heavy contaminants of exterior surfaces with rags (DDD-R-30) (7920-205-3570), saturated with solvent cleaning compound (MIL-C-372) (6850-753-4806).		
4	Further cleaning of metal parts shall be accomplished by complete immersion in dry-cleaning solvent (P-D-680) (6850-285-8012), accompanied by scrubbing and agitation or with a solvent saturated rag (DDD-R-30) (7920-205-3570).		
5	Rinse metal parts with clean dry-cleaning solvent (P-D-680) (6850-285-8012).		
6	Drain and dry clean parts with dry compressed air or with wiping rags (DDD-R-30) (7920-205-3570). The barrel bore and chamber shall be dried prior to preservation and packaging, using swabs (1005-288-3565).		
7	Cleaning of canvas, webbing, synthetic materials and wood shall be by any process or combination of processes which will accomplish thorough cleaning without damage to the item(s) (brushing, wiping, etc.).		

Step	Function	Mech	Insp
8	Apply general purpose lubricating oil (VV-L-800) (9150-281-2007), to all metallic surfaces by any applicable procedure. Excess oil shall be drained prior to packaging.		
9	After cutting VCI treated bore tube (1005-336-0216) in half (½), insert into bore of barrel bending protruding portion over the muzzle end.		
10	Wrap weapon with a piece of volatile paper (MIL-P-3420) (8135-985-7242), 18″ x 44″.		
11	Wrap sling, item 1 (Table A-28-2), with a piece of volatile paper (MIL-P-3420) (8135-985-7242) 8″ x 12″.		
12	Wrap cleaning rod, item 2 (Table A-28-2), with a piece of volatile paper (MIL-P-3420) (8135-985-7242), 4″ x 38″.		
13	Insert weapon, cleaning rod and sling in barrier bag (MIL-B-131) (8135-282-0565), 12″ x 44″.		
14	Close bag by heat sealing.		
15	Wrap each bagged weapon with cushioning material (PPP-C-843) (8135-855-6969), 18″ x 44″.		
16	Secure with pressure sensitive tape (PPP-T-60) (8135-890-9873), 2″ x 6″ (4 pieces required).		
17	Position four (4) bag-cushioned weapons alternately in a corrugated fiberboard box (PPP-F-320) (8135-132-9067), 41½″ x 21½″ x 4½″.		
18	Cover weapons with cushioning material (PPP-C-843) (8135-855-6969), 22″ x 42″.		
19	Insert one piece of corrugated fiberboard (PPP-F-320) (8135-132-9067), 21″ x 41″ in container.		
20	Clean, dry, preserve and package basic issue items in accordance with Table A-28-1 and as specified herein.		
21	Insert item 3 into item 4 (table A-28-2).		
22	Wrap with a piece of volatile paper (MIL-P-3420) (8135-985-7242), 6″ x 24″.		
23	Insert items 3 and 4 (table A-28-3) in a barrier bag (MIL-B-131) (8135-282-0565), 6″ x 25″.		
24	Close bag by heat sealing.		
25	Wrap bagged bayonet and scabbard with cushioning material (PPP-C-843) (8135-855-6969), 8″ x 24″.		
26	Secure in place with pressure sensitive tape (PPP-T-60) (8135-890-9873), 2″ x 6″ (4 pieces required).		
27	Insert four (4) bag-cushioned bayonets in container with the weapons.		
28	Cover bagged items with cushioning material (PPP-C-843) (8135-855-6969), 22″ x 42″.		
29	Close box and seal center seams of top and bottom with pressure sensitive tape (PPP-T-60) (8135-890-9873), 2″ x 44″ (2 pieces required).		
30	The following marking shall be applied to each unit container with ink, marking, stencil, black (TT-I-559) (7510-161-0811): Federal Stock Number Item description 4 Each Preserved on (month-day-year) for a maximum of 180 days Gross weight: 38.40 Cube: 26.730		
31	Assemble a shipping container, 50″ x 44″ x 42″ (see Figure A-28) with 8D nails (FF-N-105) (5315-010-6507), 16D nails (FF-N-105) (5315-010-6511) and 6D nails (FF-N-105) (5315-161-8607).		
32	Place twenty (20) Shotgun containers, unit packaged as above, in assembled shipping container.		
33	Close container with 8D nails (FF-N-105) (5315-010-6507).		
34	Apply steel strapping (QQ-S-781) (8135-283-0669), ¾″ x 196″ (3 required).		

Step	Function	Mech	Insp
35	Secure strapping with three (3) seals (8135-239-5293).		
36	The following marking shall be applied to each shipping container with minimum size 1″ letters using ink, marking, stencil, black (TT-I-559) (7510-161-0811): Federal Stock Number Item description 80 Each Preserved on (month-day-year) for a maximum of 180 days Gross weight: 954.00 Cube: 70.635		
37	Preparation instructions sheets shall be completed and placed in a waterproof envelope (MIL-B-131) (8135-282-0565), size 10″ x 12″ and secured to the item/container in a conspicuous location.		
	c. Deprocessing. Prior to placing this item in service, following receipt, deprocessing action in reverse of checklist must be completed.		

Table A-28-1. Packaging Materials List

FSN	Item description	Unit of use qty
1005-288-3565	Swab, Small Arms Cleaning, 2½″ x 2½″ 1,000 Per Package	4 ea.
**1005-336-0216	Tube, Bore, VCI treated, 45 O.D. x 45½″ long	1 ea.
**5315-010-6507	Nail, General Purpose (FF-N-105), 8D, 2⅜″ long, 50 Pounds Per Carton	½ lb.
**5315-010-6511	Nail, General Purpose (FF-N-105), 16D, 3¼″ long, 50 Pounds Per Carton	⅓ lb.
**5315-161-8607	Nail, General Purpose (FF-N-105), 6D, 1⅞″ long, 50 Pounds Per Carton	⅓ lb.
**5510-220-6078	Lumber, Soft Wood (MM-L-751), 1″ x 4″	8 bf.
**5510-220-6226	Lumber, Soft Wood (MM-L-751), 4″ x 4″	13¼ bf.
**5530-554-8709	Plywood, Soft Wood (NN-P-530), ¾″ x 48″ x 96″ sheet	85½ sf.
6850-285-8012	Solvent, Dry Cleaning (P-D-680), 55 Gallon Drum	1 pt.
6850-753-4806	Cleaning Compound Solvent (MIL-C-372), 55 Gallon Drum	1 pt.
7510-161-0811	Ink, Marking, Stencil, Black (TT-I-559), 1 Gallon Can	(****)
7920-205-3570	Rag, Wiping (DDD-R-30), 50 Pound Bale	(****)
*8135-132-9067	Fiberboard, Corrugated (PPP-F-320), 48″ x 96″ sheet	29½ sf.
**8135-239-5293	Seal, Strapping, Closed Type W/O Ears, ¾″, 1.7812 x 0.8075 Wide, 5,000 Per Box	3 ea.
8135-282-0565	Barrier Material, Water-Vaporproofed, Flexible (MIL-B-131), 36″ x 200 Yard Roll	1⅛ yd.
**8135-282-0565	Barrier Material, Water-Vaporproofed, Flexible (MIL-B-131), 36″ x 2,000 Yard Roll	⅓ yd.
**8135-283-0669	Strapping, Steel, Nailless (QQ-S-781) ¾″ x 0.023″, 100 Pound Coil	85 ft.
8135-855-6969	Cushioning Material, Cellulosic (PPP-C-843), ¾″ x 24″ x 167 Foot Package	2¾ ft.
*8135-855-6969	Cushioning Material, Cellulosic (PPP-C-843), ¾″ x 24″ x 167 Foot Package	6⅔ ft.
8135-890-9873	Pressure Sensitive Tape (PPP-T-60), 2″ x 60 Yard Roll	1⅓ yd.
*8135-890-9873	Pressure Sensitive Tape (PPP-T-60), 2″ x 60 Yard Roll	2½ yd.
8135-985-7242	Paper, Volatile, Packaging (MIL-P-3420) 36″ x 100 Foot Roll	2⅞ ft.
9150-281-2007	Corrosion, Preventative Compound, Lubricating Oil, General Purpose (VV-L-800) 55 Gallon Drum.	1¼ oz.
9310-160-7858	Board, Stencil, UU-S-625 100 sh	(****)

*Material specified for 4 each Shotguns.
**Material specified for 80 each Shotguns.
***Material specified for 2 each Shotguns.
****These items will be required in addition to the packaging materials listed above and will be used as needed.

Table A-28-2. Preservation for Basic Issue Items

Item No.	Item description	Qty req'd	Cleaning	Drying	Preserv-ative	Con-tainer	Contain-er size	Contain-er class	Mech	Insp
1	Sling, Small Arms: M1 Webbing	1	C-1							
2	Rod, Cleaning, Small Arms	1	C-3	D-1						
3	Bayonet: M1917, W/Plastic Grips	1	C-3	D-1						
4	Scabbard, Bayonet M1917	1	C-1							

EXPLANATION OF CODES

C-1 Any applicable method not injurious to the item. Normally accomplished by wiping with a dry rag (DDD-R-30) (7920-205-3570).

C-3 Wipe or scrub item with a rag (DDD-R-30) (7920-205-3570) saturated with dry-cleaning solvent (P-D-680) (6850-285-8012), or dip in solvent and brush clean.

D-1 Wipe with clean rag (DDD-R-30) (7920-205-3570) to insure removal of solvent.

P-9 Apply a light coat of corrosion preventative compound, lubricating oil, general purpose (VV-L-800) (9150-281-2007) by dipping or brushing.

P-18 Wrap item with paper volatile corrosion inhibitor (MIL-P-3420) (8135-985-7242). Place dull side of material to the inside and foil side to outside.

P-19 Apply a light coat of corrosion preventative compound (MIL-C-16173) (8030-526-1604) by dipping or brushing. Allow to dry before handling.

NOTE

CONTAINERS:

E-Bag—Fabricated from (MIL-B-131) (8135-282-0565).

Box—Fabricated from (PPP-F-320) (8135-132-9067).

Bag closure—Heat seal.

Box closure—RSC Cartons: Seal the center seams of top and bottom with tape (PPP-T-60) (8135-890-9873).

OPF Cartons: Seal the top center seam with tape (PPP-T-60) (8135-890-9873).

Bill of Materials

Name	No. req'd	Material	Dimensions	FSN
Ends	2	Plywood	44" x 42" x ¾"	5530-554-8709
Sides	2	Plywood	53" x 42" x ¾"	5530-554-8709
Top	1	Plywood	53" x 45½" x ¾"	5530-554-8709
Bottom	1	Plywood	53" x 45½" x ¾"	5530-554-8709
Cleat	4	Wood	1" x 4" x 41¾"	5510-220-6078
Cleat	4	Wood	1" x 4" x 36⅝"	5510-220-6078
Skid	3	Wood	4" x 4" x 45½	5510-220-6226

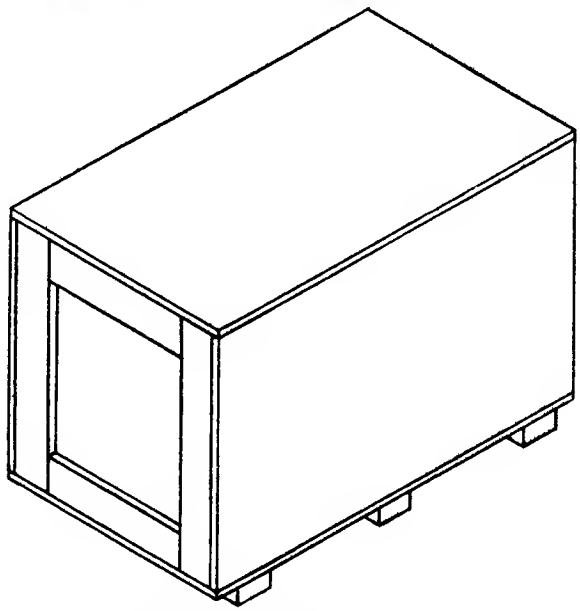

Figure A-28. Shipping Container.

APPENDIX A-29

PREPARATION INSTRUCTIONS FOR SHIPMENT: SURFACE VESSEL TRANSPORT

FSN	ITEM DESCRIPTION
☐ 1005-678-9828	Rifle, 7.62 Millimeter, M14 National Match W/E.

PRESERVED: _____ (Month) _____ (Day) _____ (Year)

PRESERVED FOR A MAXIMUM OF 180 DAYS

NOTE:

Function: Relates to instructions to be accomplished in preparation of the equipment for shipment.

Mech: For initials of mechanic or responsible processing personnel to indicate function has been completed.

Insp: For initials of inspector certifying that function has been completed as indicated by the mechanic or processing personnel.

Step	Function	Mech	Insp
	a. Unit Responsibility.		
1	Assure that weapon is in operating condition prior to movement to processing site.		
2	Certify that weapon, magazine and containers are free of ammunition.		
3	Deliver weapon, complete with tools and equipment to designated processing site.		
4	Unit Commander or representative will remain with weapons until accept anceby responsible preservation site personnel.		
	b. Cleaning, Preservation, Packaging, Packing, and Marking.		
	WARNING		
	Before cleaning and packaging, Be Sure Weapon Is Clear. Do not actuate trigger until weapon has been cleared. Inspect chamber to insure that it is empty and check to see that no ammunition is in position to be introduced. Avoid having live ammunition in vicinity of work area.		
1	Disassemble weapon, as necessary, in preparation for thorough cleaning.		
2	Clean exterior surfaces of metal parts with rags (DDD-R-30) (7920-205-3570), saturated with solvent cleaning compound (MIL-C-372) (6850-753-4806).		
3	Clean barrel bore, chamber and heavy contaminants of exterior surfaces with snug fitting bristle brushes (1005-556-4174), and (1005-690-8441), saturated with solvent cleaning compound (MIL-C-372) (6850-753-4806). Use rod furnished as "special tools".		
4	Further cleaning of metal parts shall be accomplished by complete immersion in dry cleaning solvent (P-D-680) (6850-285-8012), accompanied by scrubbing and agitation or with a solvent saturated rag (DDD-R-30) (7920-205-3570).		
5	Rinse parts with clean dry-cleaning solvent (P-D-680) (6850-285-8012).		
6	Drain and dry clean parts with dry compressed air or with wiping rags (DDD-R-30) (7920-205-3570). The barrel bore and chamber shall be dried prior to preservative application.		
7	Cleaning of canvas, webbing, synthetic materials, and wood shall be by any process or combination of processes which will accomplish thorough cleaning without damage to the item(s) (brushing, wiping, etc.).		
8	Apply general purpose lubricating oil (VV-L-800) (9150-281-2007), to all metallic surfaces by any applicable procedure. Excess oil shall be drained prior to packaging.		
9	Insert a VCI treated bore tube (1005-336-0225) into bore of barrel bending protruding portion over the muzzle end.		

Step	Function	Mech	Insp
10	Wrap weapon with a piece of volatile paper (MIL–P–3420) (8135–985–7242), 18″ x 48″.		
11	Wrap sling with a piece of volatile paper (MIL–P–3420) (8135–985–7242), 8″ x 12″.		
12	Insert weapon and sling in a barrier bag (MIL–B–131) (8135–282–0565), 12″ x 50″.		
13	Close bag by heat sealing.		
14	Wrap each bagged weapon with cushioning material (PPP–C–843) (8135–855–6969), 18″ x 48″ (3 pieces required).		
15	Secure cushioning material with pressure sensitive tape (PPP–T–60) (8135–890–9873) 2″ x 6″, (4 pieces required).		
16	Position four (4) bag-cushioned weapons in a corrugated fiberboard box (PPP–F–320) (8135–132–9067), 45½″ x 21½″ x 5½″.		
17	Cover weapons with cushioning material (PPP–C–843) (8135–855–6969), 22″ x 48″.		
18	Insert one piece of fiberboard (PPP–F–320) (8135–132–9067), 21″ x 45″, in container.		
19	Cover fiberboard with cushioning material (PPP–C–843) (8135–855–6969), 22″ x 48″.		
20	Clean magazines (3 required) with a rag (DDD–R–30) (7920–205–3570), saturated with solvent (P–D–680) (6850–285–8012).		
21	Dry magazines with dry compressed air or cleaning rags (DDD–R–30) (7920–205–3570).		
22	Wrap magazines in a piece of volatile paper (MIL–P–3420) (8135–985–7242), 9″ x 9″ (3 pieces required).		
23	Insert wrapped magazines in a barrier bag (MIL–B–131) (8135–282–0565), 8″ x 12″.		
24	Insert four (4) sets of magazines (12 total) in container.		
25	Cover bagged items with cushioning material (PPP–C–843) (8135–855–6969), 22″ x 48″.		
26	Close box and seal with pressure sensitive tape (PPP–T–60) (8135–890–9873), 2″ x 48″ (2 pieces).		
27	The following marking shall be applied to each unit container with ink, marking, stencil, black (TT–I–559) (7510–161–0811): 1005–678–9828 Rifle, 7.62 Millimeter, M14 National Match W/E 4 Each Preserved on (month-day-year) for a maximum of 180 days Gross Weight: 52.40 Cube: 3.500		
28	Assemble shipping container, 46″ x 44″ x 30″ (see fig. A–29) utilizing 8D nails (FF–N–105) (5315–010–6507); 16D nails (FF–N–105) (5315–010–6511), and 6D nails (FF–N–105) (5315–161–8607).		
29	Pack ten (10) rifle containers, unit packaged as above, in assembled shipping container.		
30	Close container with 8D nails (FF–N–105) (5315–010–6507).		
31	Apply steel strapping (QQ–S–781) (8135–283–0669), ¾″ x 460″.		
32	Secure strapping with seals (8135–239–5293) (3 required).		
33	The following marking shall be applied to each shipping container with minimum size 1″ letters using ink, marking, stencil, black (TT–I–559) (7510–161–0811): 1005–678–9828 Rifle, 7.62 Millimeter, M14 National Match W/E 40 Each Preserved on (month-day-year) for a maximum of 180 days Gross Weight: 706.00 Cube: 49.260		

Step	Function	Mech	Insp
34	Preparation instructions sheets shall be completed and placed in a waterproof envelope (MIL-B-131) (8135-282-0565), size 10″ x 12″ and secured to the item/container in a conspicuous location.		
	c. Deprocessing. Prior to placing this item in service, following receipt, deprocessing action will be in reverse of check list above.		

Table A-29. Packaging Materials List

FSN	Item description	Unit of use qty
1005-288-3565	Swab, Small Arms Cleaning, 2½″ x 2½″, 1,000 per package	3 ea.
1005-336-0225	Tube, Bore, VCI Treated, 0.19 OD x 28½″ long	1 ea.
*1005-556-4174	Brush, Cleaning, Small Arms, Bore	1 ea.
*1005-690-8441	Brush, Cleaning, Small Arms, Chamber	1 ea.
*5315-010-6507	Nail, General Purpose (FF-N-105), 8D 2⅜″ long, 50 pounds per carton	½ lb.
*5315-010-6511	Nail, General Purpose (FF-N-105), 16D, 3¼″ long, 50 pounds per carton	⅓ lb.
*5315-161-8607	Nail, General Purpose (FF-N-105), 6D, 1⅞″ long, 50 pounds per carton	¼ lb.
*5510-220-6078	Lumber, Soft Wood (MM-L-751), 1″ x 4″	8 bf.
*5510-220-6226	Lumber, Soft Wood (MM-L-751), 4″ x 4″	13¼ bf.
*5530-554-8709	Plywood, Soft Wood (NN-P-530), ¾″ x 48″ x 96″ sheet	69¾ sf.
6850-285-8012	Solvent, Dry Cleaning (P-D-680), 55 gallon drum	1 pt.
6850-753-4806	Cleaning Compound Solvent (MIL-C-372), 55 gallon drum	1 pt.
7510-161-0811	Ink, Marking, Stencil, Black (TT-I-559), 1 gallon can	(***).
7920-205-3570	Rag, Wiping (DDD-R-30) 50 pound bale	(***).
**8135-132-9067	Fiberboard, Corrugated (PPP-F-320), 48″ x 96″ sheet	32½ sf.
*8135-239-5293	Seal, Strapping, Closed Type W/O Ears, ¾″, 1.7812 x 0.8075 wide, 5,000 per box	3 ea.
8135-282-0565	Barrier Material, Water-Vaporproofed, Flexible (MIL-B-131), 36″ x 200 yard roll	1⅓ yds.
*8135-282-0565	Barrier Material, Water-Vaporproofed, Flexible (MIL-B-131), 36″ x 200 yard roll	⅓ yd.
*8135-283-0669	Strapping, Steel, Nailless (QQ-S-781), ¾″ x 0.023″, 100 pound coil	51 ft.
8135-855-6969	Cushioning Material, Cellulosic (PPP-C-843), ¾″ x 24″ x 167 foot package	3 ft.
**8135-855-6969	Cushioning Material, Cellulosic (PPP-C-843), ¾″ x 24″ x 167 foot package	11 ft.
8135-890-9873	Pressure Sensitive Tape (PPP-T-60), 2″ x 60 yard roll	⅔ yd.
**8135-890-9873	Pressure Sensitive Tape (PPP-T-60), 2″ x 60 yard roll	2⅔ yds.
8135-985-7242	Paper, Volatile, Packaging (MIL-P-3420) 36″ x 100 foot roll	2¾ ft.
9150-281-2007	Corrosion, Preventative Compound, Lubricating Oil, General Purpose (VV-L-800), 55 gallon drum.	1¼ oz.
9310-160-7858	Board, Stencil, UU-S-625, 100 sh	(***).

*Material specified is for 40 rifles.
**Material specified is for 4 rifles.
***These items will be required in addition to the packaging materials listed above and will be used as needed.

Bill of Materials

Name	No. req'd	Material	Dimensions	FSN
Ends	2	Plywood	44″ x 30″ x ¾″	5530-554-8709
Sides	2	Plywood	49″ x 30″ x ¾″	5530-554-8709
Top	1	Plywood	49″ x 45½″ x ¾″	5530-554-8709
Bottom	1	Plywood	49″ x 45½″ x ¾″	5530-554-8709
Skids	3	Wood	4″ x 4″ x 45½″	5510-220-6226
Cleats	4	Wood	1″ x 4″ x 29¾″	5510-220-6078
Cleats	4	Wood	1″ x 4″ x 36⅝″	5510-220-6078

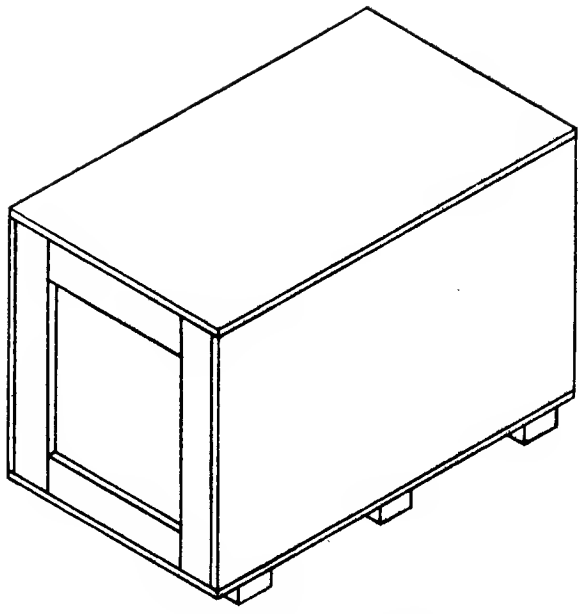

Figure A-29. Shipping Container.

APPENDIX A-30

PREPARATION INSTRUCTIONS FOR SHIPMENT: SURFACE VESSEL TRANSPORT

FSN	ITEM DESCRIPTION
☐ 1005-679-6763	Machine Gun, 7.62MM: M73.
☐ 1005-869-8816	Machine Gun, 7.62MM: M73 (Fixed) W/O Suppressor.
☐ 1005-937-7323	Machine Gun, 7.62MM: M73A1.

PRESERVED: _____ (Month) _____ (Day) _____ (Year)

PRESERVED FOR A MAXIMUM OF 180 DAYS

NOTE:

Function: Relates to instructions to be accomplished in preparation of the equipment for shipment.

Mech: For initials of mechanic or responsible processing personnel to indicate function has been completed.

Insp: For initials of inspector certifying that function has been completed as indicated by the mechanic or processing personnel.

Step	Function	Mech	Insp
	a. Unit Responsibility.		
1	Assure that weapon is in operating condition prior to movement to processing site.		
2	Certify that weapon and containers are free of ammunition.		
3	Deliver weapon to designated processing site.		
4	Unit Commander or representative will remain with weapon until acceptance by responsible preservation site personnel.		
	b. Cleaning, Preservation, Packaging, Packing, and Marking.		
	WARNING Before cleaning and packaging, Be Sure Weapon Is Clear. Do not actuate trigger until weapon has been cleared. Inspect chamber to insure that it is empty and check to see that no ammunition is in position to be introduced. Avoid having live ammunition in vicinity of work area.		
1	Disassemble weapon as necessary in preparation for cleaning.		
2	Surfaces of the Back Plate Assembly with Solenoid shall be cleaned by any applicable procedure. Contamination of the Solenoid with cleaning solvents or preservative oils shall be prevented.		
3	Clean exterior surfaces of metal parts with a rag (DDD-R-30) (7920-205-3570) saturated with solvent cleaning compound (MIL-C-372) (6850-753-4806).		
4	Clean barrel bore, chamber and heavy contaminants of exterior metal surfaces with snug fitting bristle brushes (1005-556-4174) and (1005-690-8441) saturated with solvent cleaning compound (MIL-C-372) (6850-753-4806). Use rod furnished as "special tools".		
5	Further cleaning of metal parts shall be accomplished by complete immersion in dry cleaning solvent (P-D-680) (6850-285-8012), accompanied by scrubbing and agitation or with a solvent saturated wiping rag (DDD-R-30) (7920-205-3570).		
6	Rinse parts with clean dry-cleaning solvent (P-D-680) (6850-285-8012).		

Step	Function	Mech	Insp
7	Drain and dry cleaned parts with dry compressed air or with wiping rags (DDD-R-30) (7920-205-3570). The barrel bore and chamber shall be dried with cleaning swabs (1005-288-3565). All cleaned surfaces shall be dried prior to preservative application.		
8	Apply general purpose Lubricating Oil (VV-L-800) (9150-281-2007), to all metallic surfaces by any applicable procedure. Contamination of the solenoid with oil shall be prevented.		
9	Reassemble weapon with the exception of the flash suppressor.		
10	Insert a VCI treated bore tube (1005-336-0225) into bore of the barrel bending protruding portion over the muzzle end.		
11	Wrap weapon with a piece of volatile paper (MIL-P-3420) (8135-985-7242) 20″ x 50″.		
12	Wrap flash suppressor with a piece of volatile paper (MIL-P-3420) (8135-985-7242) 9″ x 12″.		
13	Secure flash suppressor to barrel of weapon with pressure sensitive tape (PPP-T-60) (8135-890-9873) 2″ x 12″ (2 pieces required).		
14	Overwrap wrapped weapon with flash suppressor with cushioning material (PPP-C-843) (8135-855-6969) 20″ x 50″.		
15	Secure overwrap with pressure sensitive tape (PPP-T-60) (8135-890-9873) 2″ x 6″ (4 pieces required).		
16	Place overwrapped weapon with flash suppressor into a barrier bag (MIL-B-131) (8135-282-0565) 15″ x 46″.		
17	Close bag by heat sealing.		
18	Place bagged weapon in a corrugated fiberboard box (PPP-F-320) (8135-132-9067) 36″ x 7″ x 6″.		
19	Close box and seal with pressure sensitive tape (PPP-T-60) (8135-890-9873) 2″ x 40″ (2 pieces required).		
20	The following marking shall be applied to each unit container with ink, marking, stencil, black, (TT-I-559) (7510-161-0811) using weight specified below for each FSN: Federal Stock Number Item description Preserved on (month-day-year) for a maximum of 180 days 1 each Gross Weight: Cube: 1.286 FSN: *wt* 1005-679-6763 ..... 34.50 1005-869-8816 ..... 31.00 1005-937-7323 ..... 33.00		
21	Assemble shipping container, 36¾″ x 32¾″ x 30″ (see fig. A-30) utilizing 6D (FF-N-105) (5315-161-8607) 8D (FF-N-105) (5315-010-6507) and 16D (FF-N-105) (5315-010-6511) nails.		
22	Pack 20 packaged machine guns in assembled shipping container.		
23	Secure lid with 8D nails (FF-N-105) (5315-010-6507).		
24	Apply strapping (QQ-S-781) (8135-283-0669), 152″ x ¾″ (3 required).		
25	Secure strapping with seals (8135-239-5293) (3 required).		
26	The following marking shall be applied to each shipping container with minimum size 1″ letters using ink, marking, stencil, black (TT-I-559) (7510-161-0811) using weight specified below for each FSN: Federal Stock Number Item description Preserved on (month-day-year) for a maximum of 180 days 20 Each Gross Weight: —— Cube: 28.519		

Step	Function	Mech	Insp
	FSN: *wt* 1005-679-6763 ..... 830.00 1005-869-8816 ..... 750.00 1005-937-7323 ..... 800.00		
27	Preparation instructions sheets shall be completed and placed in a waterproof envelope (MIL-B-131) (8135-282-0565), size 10″ x 12″ and secured to the item/container in a conspicuous location.		
	c. Deprocessing. Prior to placing this item in service, following receipt, deprocessing action will be in reverse of checklist above.		

Table A-30. Packaging Materials List

FSN	Item description	Unit of use qty
1005-288-3565	Swab, Small Arms, Cleaning, 2½″ x 2½″, 100 Per Package	3 ea.
1005-336-0225	Tube, Bore, VCI Treated, 0.19 O.D. x 28½″	1 ea.
*1005-556-4174	Brush, Cleaning, Small Arms: Bore	1 ea.
*1005-690-8441	Brush, Cleaning, Small Arms: Chamber	1 ea.
*5315-010-6507	Nail, General Purpose (FF-N-105), 8D, 2⅜″ Lg., 50 Pounds per Carton	1¼ lb.
*5315-010-6511	Nail, General Purpose (FF-N-105), 16D, 3¼″ Lg., 50 Pounds per Carton	1 lb.
*5315-161-8607	Nail, General Purpose (FF-N-105), 6D, 1⅞″ Lg., 50 Pounds per Carton	½ lb.
*5510-220-6078	Lumber, Soft Wood (MM-L-751), 1″ x 4″	6 bf.
*5510-220-6226	Lumber, Soft Wood (MM-L-751), 4″ x 4″	12 bf.
*5530-554-8709	Plywood, Soft Wood (NN-P-530), ¾″ x 48″ x 96″ Sheet	49 sf.
6850-285-8012	Solvent, Dry Cleaning (P-D-680), 55 Gallon Drum	1 pt.
6850 753 4806	Cleaning Compound Solvent (MIL-C-372), 55 Gallon Drum	1 pt.
7510-161-0811	Ink, Marking, Stencil, Black (TT-I-559) 1 Gallon Can	(**)
7920-205-3570	Rag, Wiping (DDD-R-30) 50 Pound Bale	(**)
8135-132-9067	Fiberboard, Corrugated (PPP-F-340), 48″ x 96″ Sheet	7⅓ sf.
*8135-239-5293	Seal, Strapping, Closed Type, W/O Ears, ¾″, 1.7812 x 0.8075 Wide, 5,000 per Box	3 ea.
8135-282-0565	Barrier Material, Water-Vaporproofed, Flexible (MIL-B-131) 36″ x 200 Yard Roll	1⅓ yd.
*8135-282-0565	Barrier Material, Water-Vaporproofed, Flexible (MIL-B-131) 36″ x 200 Yard Roll	⅓ yd.
*8135-283-0669	Strapping, Steel, Nailless (QQ-S-781) ¾″ x 0.023″, 100 Pound Coil	25 ft.
8135-855-6969	Cushioning Material, Cellulosic (PPP-C-843), ¾″ x 24″ x 167 Feet Per Package	3½ ft.
8135-890-9873	Pressure Sensitive Tape (PPP-T-60), 2″ x 60 Yard Roll	3½ yd.
8135-985-7242	Paper, Volatile, Packaging (MIL-P-3420), 36″ x 100 Foot Roll	2½ ft.
9150-281-2007	Corrosion, Preventative Compound, Lubricating Oil, General Purpose (VV-L-800), 55 Gallon Drum	1¼ oz.
9310-160-7858	Board, Stencil, UU-S-625 100 sh	(**)

*Material Requirements for 20 Machine guns.
**These items will be required in addition to the packaging materials listed above and will be used as needed.

Bill of Materials

Name	Qty req'd	Material	Dimensions	FSN
Ends	2	Plywood	32¾″ x 30″ x ¾″	5530-554-8709
Sides	2	Plywood	39¾″ x 30″ x ¾″	5530-554-8709
Top	1	Plywood	39¾″ x 34¼″ x ¾″	5530-554-8709
Bottom	1	Plywood	39¾″ x 34½″ x ¾″	5530-554-8709
Skids	3	Wood	4″ x 4″ x 34¼″	5510-220-6226
Cleats	4	Wood	1″ x 4″ x 29¾″	5510-220-6078
Cleats	4	Wood	1″ x 4″ x 25⅜″	5510-220-6078

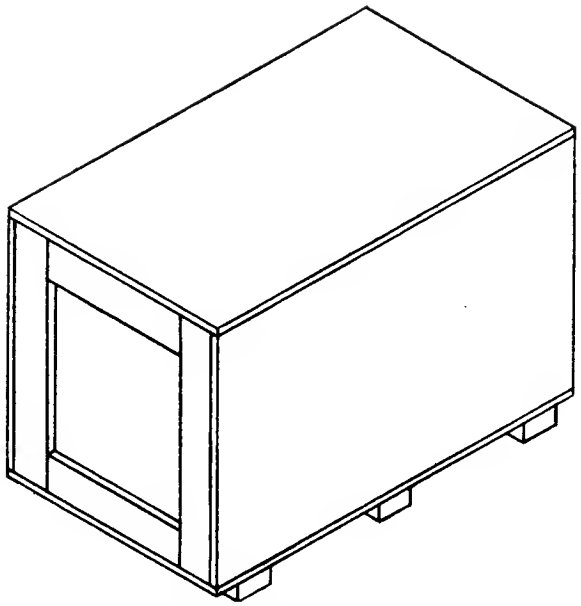

Figure A-30. Shipping Container.

APPENDIX A-31

PREPARATION INSTRUCTIONS FOR SHIPMENT: SURFACE VESSEL TRANSPORT

FSN	ITEM DESCRIPTION
☐ 1005-694-4123	Rifle, Caliber .22, Remington Model 40X H-1 (M12).

PRESERVED: _____ (Month) _____ (Day) _____ (Year)

PRESERVED FOR A MAXIMUM OF 180 DAYS

NOTE:

Function: Relates to instructions to be accomplished in preparation of the equipment for shipment.

Mech: For initials of mechanic or responsible processing personnel to indicate function has been completed.

Insp: For initials of inspector certifying that function has been completed as indicated by the mechanic or processing personnel.

Step	Function	Mech	Insp
	a. Unit Responsibility.		
1	Assure that weapon is in operating condition prior to movement to processing site.		
2	Certify that weapon and containers are free of ammunition.		
3	Deliver weapon, complete with tools and equipment, to designated processing site.		
4	Unit Commander, or representative, will remain with weapons until acceptance by responsible preservation site personnel.		
	b. Cleaning, Preservation, Packaging, Packing and Marking.		
	WARNING Before cleaning and packaging, BE SURE WEAPON IS CLEAR. Do not actuate trigger until weapon has been cleared. Inspect chamber to insure that it is empty and check to see that no ammunition is in position to be introduced. Avoid having live ammunition in vicinity of work area.		
1	Disassemble weapon as necessary in preparation for thorough cleaning.		
2	Clean exterior surfaces of metal parts with rags (DDD-R-30) (7920-205-3570) saturated with solvent, cleaning compound, (MIL-C-372) (6850-753-4806).		
3	Clean barrel bore, chamber and heavy contaminants, of exterior surfaces, with snug fitting bristle brush (1005-556-4174), and swabs (1005-288-3565), saturated with solvent, cleaning compound (MIL-C-372) (6850-753-4806). Use rod furnished as "special tools."		
4	Further cleaning of metal parts shall be accomplished by complete immersion in dry cleaning solvent, (P-D-680) (6850-285-8012), accompanied by scrubbing and agitation or with a solvent saturated cleaning rag (DDD-R-30) (7920-205-3570).		
5	Rinse metal parts with clean dry-cleaning solvent, (P-D-680) (6850-285-8012).		
6	Drain and dry clean parts with dry, compressed air, or with wiping rags (DDD-R-30) (7920-205-3570). The barrel bore and chamber shall be dried prior to preservative application.		
7	Apply general purpose lubricating oil (VV-L-800) (9150-281-2007) to all metallic surfaces by any applicable procedure. Excess oil shall be drained prior to packaging.		
8	Reassemble weapon.		
9	Insert a VCI treated bore tube (1005-336-0225) into bore of barrel, bending protruding portion over the muzzle end.		

Step	Function	Mech	Insp
10	Fold sling and wrap with a piece of volatile paper (MIL–P–3420) (8135–985–7242), 8″ x 12″.		
11	Wrap weapon with a piece of volatile paper (MIL–P–3420) (8135–985–7242) 18″ x 54″.		
12	Insert weapon and sling in barrier bag (MIL–B–131) (8135–282–0565), 12″ x 54″.		
13	Close bag by heat sealing.		
14	Wrap each bagged weapon with cushioning material (PPP–C–843) (8135–855–6969), 18″ x 54″ (3 pieces required).		
15	Secure cushioning material with pressure sensitive tape (PPP–T–60) (8135–890–9873), 2″ x 6″ (4 pieces required).		
	Position four (4) bag-cushioned weapons, alternately, in a corrugated fiberboard box (PPP–F–320) (8135–132–9067) 51½″ x 19½″ x 3½″.		
17	Cover weapons with cushioning material (PPP–C–843) (8135–855–6969) 20″ x 50″.		
18	Close container and seal center seams of top and bottom with tape (PPP–T–60) (8135–890–9873) 2″ x 54″ (2 pieces).		
19	The following markings shall be applied to each unit container with ink, marking, stencil, black (TT–I–559) (7510–161–0811): 1005–694–4123 Rifle, caliber .22, Remington, Model 40X, H–1 (M–12) 4 Each Preserved on (month-day-year) for a maximum of 180 days Gross Weight: 42.00 Cube: 3.869		
20	Assemble a shipping container, 52″ x 40″ x 40″ (see Figure A–31) utilizing 8D nails (FF–N–105) (5315–010–6507); 16D nails (FF–N–105) (5315–010–6511); and 6D nails (FF–N–105) (5315–161–8607).		
21	Place twenty (20) rifle containers, as unit packaged above, in assembled shipping container.		
22	Secure lid with 8D nails (FF–N–105) (5315–010–6507).		
23	Apply steel strapping to shipping container (QQ–S–781) (8135–283–0669), ¾″ x 172″ (3 pcs.).		
24	Secure strapping with three (3) seals (8135–239–5293).		
25	The following marking shall be applied to each shipping container with minimum size 1″ letters using, ink, marking, stencil, black (TT–I–559) (7510–161–0811): 1005–694–4123 Rifle, Caliber .22, Remington, Model 40X H–1 (M–12) 80 Each Preserved on (month-day-year) for a maximum of 180 days Gross Weight: 1,000 Cube: 58.699		
26	Preparation instructions sheets shall be completed and placed in a waterproof envelope (MIL–B–131) (8135–282–0565), size 10″ x 12″ and secured to the item/container in a conspicuous location.		
	c. Deprocessing. Prior to placing this item in service, following receipt, deprocessing action will be in reverse of checklist above.		

Table A-31. Packaging Materials List

FSN	Item description	Unit of use qty
1005-288-3565	Swab, Small Arms Cleaning, 2½'' x 2½'', 1000 per package	3 ea.
1005-336-0225	Bore Tube, VCI treated, .19 O.D. x 28½''	1 ea.
*1005-556-4174	Brush, Cleaning, Small Arms: Bore	1 ea.
**5315-010-6507	Nail, General Purpose (FF-N-105) 8D, 2⅜'' long, 50 pounds per carton	1 lb.
**5315-010-6511	Nail, General Purpose (FF-N-105) 16D 3¼'' long, 50 pounds per carton	½ lb.
**5315-161-8607	Nail, General Purpose (FF-N-105), 6D, 1⅞'' long, 50 pounds per carton	½ lb.
**5510-220-6078	Lumber, Soft Wood (MM-L-751) 1'' x 4''	8 bf.
**5510-220-6226	Lumber, Soft Wood (MM-L-751) 4'' x 4''	15 bf.
**5530-554-8709	Plywood, Soft Wood (NN-P-530) ¾'' x 48'' x 96'' Sheet	84½ sf.
6850-285-8012	Solvent, Dry Cleaning (P-D-680), 55 Gallon Drum	1 pt.
6850-753-4806	Cleaning Compound Solvent (MIL-C-372) 55 Gallon Drum	1 pt.
7510-161-0811	Ink, Marking, Stencil, Black (TT-I-559) 1 Gallon Can	(***)
7920-205-3570	Rag, Wiping (DDD-R-30) 50 Pound Bale	(***)
*8135-132-9067	Fiberboard, Corrugated (PPP-F-320) 48'' x 96'' Sheet	23½ sf.
**8135-239-5293	Seal, Strapping, Closed Type W/O Ears, ¾'', 1.7812 x 0.8075 Wide 5,000 Per Box	3 ea.
8135-282-0565	Barrier Material, Water-Vaporproofed, Flexible (MIL-B-131) 36'' x 200 Yard Roll	1⅔ yd.
**8135-282-0565	Barrier Material, Water-Vaporproofed, Flexible (MIL-B-131) 36'' x 200 Yard Roll	⅓ yd.
**8135-283-0669	Strapping, Steel, Nailless (QQ-S-781) ¾'' x 0.023'' 100 Pound Coil	40 ft.
8135-855-6969	Cushioning Material, Cellulosic (PPP-C-843), ¾'' x 24'' x 167 Foot Package	3⅜ ft.
*8135-855-6969	Cushioning Material, Cellulosic (PPP-C-843), ¾'' x 24'' x 167 Foot Package	⅜ ft.
8135-890-9873	Pressure Sensitive Tape (PPP-T-60) 2'' x 60 Yard Roll	⅔ yd.
*8135-890-9873	Pressure Sensitive Tape (PPP-T-60) 2'' x 60 Yard Roll	3 yd.
8135-985-7242	Paper, Volatile, Packaging (MIL-P-3420) 36'' x 100 Foot Roll	2½ ft.
9150-281-2007	Corrosion, Preventative Compound, Lubricating Oil, General Purpose (VV-L-800) 55 Gallon Drum.	1¼ oz.
9310-160-7858	Board, Stencil, UU-S-625 100 sh	(***)

*Material specified for 4 Each rifles.
**Material specified for 80 Each rifles.
***These items will be required in addition to the packaging materials listed above and will be used as needed.

Bill of Materials

Name	No. req'd	Material	Dimensions	FSN
Ends	2	Plywood	40'' x 40'' x ¾''	5530-554-8709
Sides	2	Plywood	55'' x 40'' x ¾''	5530-554-8709
Top	1	Plywood	55'' x 41½'' x ¾''	5530-554-8709
Bottom	1	Plywood	55'' x 41½'' x ¾''	5530-554-8709
Cleat (A)	4	Wood	1'' x 4'' x 39¾''	5510-220-6078
Cleat (B)	4	Wood	1'' x 4'' x 32⅝''	5510-220-6078
Skid	3	Wood	4'' x 4'' x 41½''	5510-220-6226

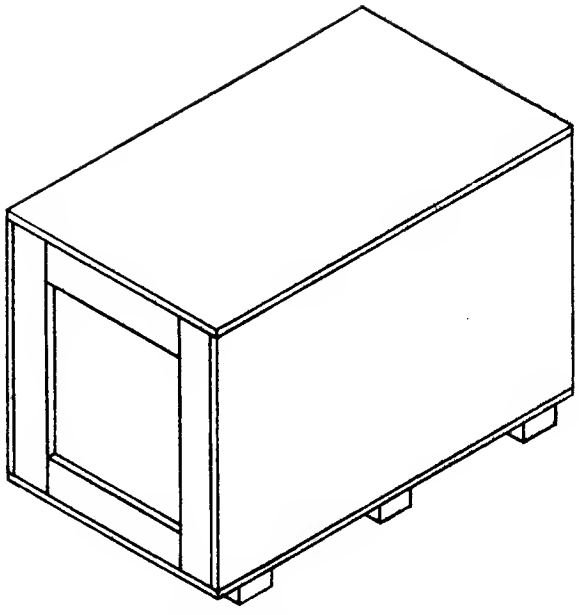

Figure A-31. Shipping container.

APPENDIX A-32

PREPARATION INSTRUCTIONS FOR SHIPMENT: SURFACE VESSEL TRANSPORT

FSN	ITEM DESCRIPTION
☐ 1005-711-6202	Bipod, Rifle: M2.

PRESERVED: _____ (Month) _____ (Day) _____ (Year)

PRESERVED FOR A MAXIMUM OF 180 DAYS

NOTE:

Function: Relates to instructions to be accomplished in preparation of the equipment for shipment.

Mech: For initials of mechanic or responsible processing personnel to indicate function has been completed.

Insp: For initials of inspector certifying that function has been completed as indicated by the mechanic or processing personnel.

Step	Function	Mech	Insp
	a. Unit Responsibility.		
1	Assure that bipod is in operating condition.		
2	Deliver bipod to designated processing site.		
3	Unit commander or representative will remain with bipods until acceptance by responsible preservation site personnel.		
	b. Cleaning, Preservation, Packaging, Packing and Marking.		
1	Disassemble bipod as necessary in preparation for cleaning.		
2	Clean exterior surfaces of metal parts with cleaning rags (DDD-R-30) (7920-205-3570), saturated with solvent cleaning compound (MIL-C-372) (6850-753-4806).		
3	Further cleaning of metal parts shall be accomplished by complete immersion in dry cleaning solvent (P-D-680) (6850-285-8012), accompanied by scrubbing and agitation or with a solvent saturated cleaning rag (DDD-R-30) (7920-205-3570).		
4	Rinse parts with clean, dry cleaning solvent (P-D-680) (6850-285-8012).		
5	Drain and dry cleaned parts with dry compressed air or with wiping rags (DDD-R-30) (7920-205-3570). All cleaned surfaces shall be dried prior to preservation application.		
6	Apply general purpose lubricating oil (VV-L-800) (9150-281-2007), to all metallic surfaces by any applicable procedure. Excess oil shall be drained prior to packaging.		
7	Reassemble bipod.		
8	Wrap bipod with a piece of volatile paper (MIL-P-3420) (8135-985-7242), 12″ x 18″.		
9	Overwrap bipod with cushioning material (PPP-C-843) (8135-855-6969), 12″ x 18″.		
10	Secure cushioning material with pressure sensitive tape (PPP-T-60) (8135-890-9873), 2″ x 6″ (3 pieces required).		
11	Place ten (10) overwrapped bipods in a corrugated fiberboard box (PPP-F-320) (8135-132-9067), 12½″ x 12½″ x 11″.		
12	Close box and seal center seams of top and bottom with pressure sensitive tape (PPP-T-60) (8135-890-9873), 2″ x 16″ (2 pieces required).		

Step	Function	Mech	Insp
13	The following markings shall be applied to each unit container with ink, marking, stencil, black (TT–I–559) (7510–161–0811): 1005–711–6202 Bipod, Rifle: M2 10 Each Preserved on (month-day-year) for a maximum of 180 days Gross Weight: 22.00 Cube: 1.124		
14	Assemble a shipping container, 45⅛″ x 39⅛″ x 39⅛″ (see Figure A–32) utilizing 8D nails (FF–N–105) (5315–010–6507), 6D nails (FF–N–105) (5315–161–8607), and 16D nails (FF–N–105) (5315–010–6511).		
15	Pack 36 bipod boxes, as unit packaged above, in assembled shipping container, 45⅛″ x 39⅛″ x 39⅛″.		
16	Secure lid with 8D nails (FF–N–105) (5315–010–6507).		
17	Apply three (3) steel straps (QQ–S–781) (8135–283–0669), ¾″ x 170″ (3 pieces required).		
18	Secure strapping with three (3) seals, ¾″ (8135–239–5293).		
19	The following markings shall be applied to each shipping container with minimum size 1″ letters, using ink, marking, stencil, black (TT–I–559) (7510–161–0811): 1005–711–6202 Bipod, Rifles: M2 360 Each Preserved on (month-day-year) for a maximum of 180 days Gross Weight: 990.00 Cube: 50.455		
20	Preparation instructions sheet shall be completed and placed in a waterproof envelope (MIL–B–131) (8135–282–0565), 10″ x 12″ and secured to the item/container in a conspicuous location.		
	c. Deprocessing. Prior to placing this item in service following receipt, deprocessing action will be in reverse of check list above.		

Table A-32. Packaging Materials List

FSN	Item description	use qty Unit of
**5315-010-6507	Nail, General Purpose (FF-N-105), 8D, 2⅜'' Lg., 50 Pounds per Carton	⅔ lb.
**5315-010-6511	Nail, General Purpose (FF-N-105), 16D, 3¼'' Lg., 50 Pounds per Carton	⅔ lb.
**5315-161-8607	Nail, General Purpose (FF-N-105), 6D, 1⅞'' Lg., 50 Pounds per Carton	⅓ lb.
**5510-220-6078	Lumber, Soft Wood (MM-L-751) 1'' x 4''	8 bf.
**5510-220-6226	Lumber, Soft Wood (MM-L-751) 4'' x 4''	13 ⅓ bf.
**5530-554-8709	Plywood, Soft Wood (NN-P-530), ¾'' x 48'' x 96'' Sheet	75 sf.
6850-285-8012	Solvent, Dry Cleaning (P-D-680), 55 Gallon Drum	1¼ oz.
6850-753-4806	Cleaning Compound Solvent (MIL-C-372), 55 Gallon Drum	⅛ oz.
7510-161-0811	Ink, Marking, Steneil, Blaek (TT-I-559), 1 Gallon Can	(***)
7920-205-3570	Rag, Wiping (DDD-R-30), 50 Pound Bale	(***)
*8135-132-9067	Fiberboard, Corrugated (PPP-F-320), 48'' x 96'' Sheet	8⅔ sf.
**8135-239-5293	Seal, Strapping, Closed Type W/O Ears, ¾'', 1.7812 x 0.8075 Wide, 5,000 per Box	3 ea.
*8135-282-0565	Barrier Material, Water-Vaporproof, Flexible (MIL-B 131), 36'' x 200 Yard Roll	⅓ yd.
**8135-283-0669	Strapping, Steel, Nailless (QQ-S-781), ¾'' x 0.023'', 100 Pound Coil	42½ ft.
8135-855-6969	Cushioning Material, Cellulosie (PPP-C-843), ¾'' x 24'' x 167 Foot Paekage	¾ ft.
8135-890-9873	Pressure Sensitive Tape (PPP-T-60), 2'' x 60 Yard Roll	½ yd.
*8135-890-9873	Pressure Sensitive Tape (PPP-T-60), 2'' x 60 Yard Roll	⅞ yd.
8135-985-7242	Paper, Volatile, Paekaging (MIL-P-3420) 36'' x 100 Foot Roll	½ ft.
9150-281-2007	Corrosion, Preventative Compound, Lubrieating Oil, General Purpose, (VV-L-800), 55 Gallon Drum.	1¼ oz.

*Material requirements for 10 each bipods.
**Material requirements for 360 each bipods.
***These items will be required in addition to the paekaging materials listed above and will be used as needed.

Bill of Materials

Name	Qty. req'd	Material	Dimensions	FSN
Ends	2	Plywood	39⅛'' x 39⅛'' x ¾''	5530-554-8709
Sides	2	Plywood	48⅛'' x 39⅛'' x ¾''	5530-554-8709
Top	1	Plywood	48⅛'' x 40⅝'' x ¾''	5530 554-8709
Bottom	1	Plywood	48⅛'' x 40⅝'' x ¾''	5530 554-8709
Skids	3	Wood	4'' x 4'' x 40⅝''	5510-220-6226
Cleats	4	Wood	1'' x 4'' x 38⅞''	5510-220-6078
Cleats	4	Wood	1'' x 4'' x 31⅞''	5510-220-6078

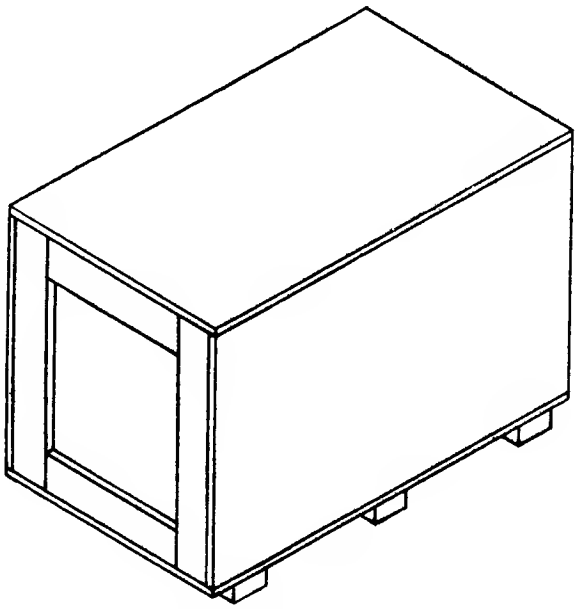

Figure A-32. Shipping container.

APPENDIX A-33

PREPARATION INSTRUCTIONS FOR SHIPMENT: SURFACE VESSEL TRANSPORT

	FSN	ITEM DESCRIPTION
☐	1005-713-9823	Machine Gun, 7.62MM: M60.
☐	1005-909-3002	Machine Gun, 7.62MM: M60D.

PRESERVED: _____ (Month) _____ (Day) _____ (Year)

PRESERVED FOR A MAXIMUM OF 180 DAYS

NOTE:

Function: Relates to instructions to be accomplished in preparation of the equipment for shipment.

Mech: For initials of mechanic or responsible processing personnel to indicate function has been completed.

Insp: For initials of inspector certifying that function has been completed as indicated by the mechanic or processing personnel.

Step	Function	Mech	Insp
	a. Unit Responsibility.		
1	Assure that weapon is in operating condition prior to movement to processing site.		
2	Certify that weapon and containers are free of ammunition.		
3	Deliver weapon to designated processing site.		
4	Unit Commander or representative will remain with weapon until acceptance by responsible preservation site personnel.		
	b. Cleaning, Preservation, Packaging, Packing, and Marking.		
	WARNING Before cleaning and packaging, Be Sure Weapon Is Clear. Do not actuate trigger until weapon has been cleared. Inspect chamber to insure that it is empty and check to see that no ammunition is in position to be introduced. Avoid having live ammunition in vicinity of work area.		
1	Disassemble weapon as necessary in preparation for cleaning.		
2	Clean exterior surfaces of metal parts with a rag (DDD-R-30) (7920-205-3570) saturated with solvent, cleaning compound (MIL-C-372) (6850-753-4806).		
3	Clean barrel bore, chamber and heavy contaminants of exterior metal surfaces with snug fitting bristle brushes (1005-556-4174) and (1005-690-3115) saturated with solvent cleaning compound (MIL-C-372) (6850-753-4806). Use rod furnished as "special tools".		
4	Further cleaning of metal parts shall be accomplished by complete immersion in dry cleaning solvent (P-D-680) (6850-285-8012) accompanied by scrubbing and agitation or with a solvent saturated wiping rag (DDD-R-30) (7920-205-3570).		
5	Rinse parts with clean dry cleaning solvent (P-D-680) (6850-285-8012).		
6	Drain and dry cleaned parts with dry compressed air or wiping rags (DDD-R-30) (7920-205-3570). The barrel bore and chamber shall be dried with cleaning swabs (1005-288-3565). All cleaned surfaces shall be dried prior to preservation application.		
7	Apply general purpose lubricating oil (VV-L-800) (9150-281-2007) to all metallic surfaces by any applicable procedure. Excess oil shall be drained prior to packaging.		
8	Reassemble weapon with the exception of the barrel assembly.		

Step	Function	Mech	Insp
9	Wrap weapon with a piece of volatile paper (MIL-P-3420) (8135-985-7242) 24″ x 36″.		
10	Overwrap weapon with cushioning material (PPP-C-843) (8135-855-6969) 24″ x 36″.		
11	Secure overwrap with pressure sensitive tape (PPP-T-60) (8135-890-9873) 2″ x 6″ (4 pieces required).		
12	Place overwrapped weapon into a barrier bag (MIL-B-131) (8135-282-0565) 16″ x 40″.		
13	Close bag by heat sealing.		
14	Insert a VCI treated bore tube (1005-336-0225) into bore of the barrel assembly bending protruding portion over the muzzle end.		
15	Wrap barrel assembly with a piece of volatile paper (MIL-P-3420) (8135-985-7242) 20″ x 36″.		
16	Overwrap barrel assembly with cushioning material (PPP-C-843) (8135-855-6969) 20″ x 36″.		
17	Secure overwrap with pressure sensitive tape (PPP-T-60) (8135-890-9873) 2″ x 6″ (3 pieces required).		
18	Place overwrapped barrel assembly into a barrier bag (MIL-B-131) (8135-282-0565) 14″ x 35″.		
19	Close bag by heat sealing.		
20	Place bagged barrel assembly and weapon in a corrugated fiberboard box (PPP-F-320) (8135-132-9067) 33″ x 8½″ x 8½″.		
21	Close box and seal with pressure sensitive tape (PPP-T-60) (8135-890-9873) 2″ x 36″ (2 pieces required).		
22	The following markings shall be applied to each unit container with ink, marking, stencil, black (TT-I-559) (7510-161-0811) using weight specified below for each FSN: Federal Stock Number Item description 1 Each Preserved on (month-day-year) for a maximum of 180 days Gross Weight: Cube 1.570: FSN: *Wt* 1005-713-9823 ..... 29.00 1005-909-3002 ..... 27.75		
23	Assemble shipping container, 45½″ x 36½″ x 34″. For Bill of Material (See Figure A-33) utilizing 6D (FF-N-105) (5315-161-8607), 8D (FF-N-105) (5315-010-6507) and 16D (FF-N-105) (5315-010-6511) nails.		
24	Pack 20 machine gun boxes as unit packaged above in assembled shipping container, 45½″ x 36½″ x 34″.		
25	Secure lid with 8D (FF-N-105) (5315-010-6507) nails.		
26	Apply strapping (QQ-S-781) (8135-283-0669) ¾″ x 480″.		
27	Secure strapping with seals (8135-239-5293) (3 required).		
28	The following marking shall be applied to each shipping container with minimum size 1″ letters using ink, marking, stencil, black (TT-I-559) (7510-161-0811) using weight specified below for each FSN. Federal Stock Number Item description 20 Each Preserved on (month-day-year) for a maximum of 180 days Gross Weight: Cube: 41.728 FSN: *Wt* 1005-713-9823 ..... 642.00 1005-909-3002 ..... 617.00		

Step	Function	Mech	Insp
29	Preparation instructions sheet shall be completed and placed in a waterproof envelope (MIL-B-131) (8135-282-0565) size 10″ x 12″ and secured to the item container in a conspicuous location.		
	c. Deprocessing. Prior to placing this item in service, following receipt, deprocessing action will be in reverse of checklist above.		

Table A-33. Packaging Materials List

FSN	Item description	Unit of use qty.
1005-288-3565	Swab, Small Arms Cleaning, 2½″ x 2½″, 1,000 Per Package	3 ea.
1005-336-0225	Tube, Bore, VCI Treated, 19 O.D. x 28½″	1 ea.
*1005-556-4174	Brush, Cleaning, Small Arms: Bore	1 ea.
*1005-690-3115	Brush, Cleaning, Small Arms: Chamber	1 ea.
*5315-010-6507	Nail, General Purpose (FF-N-105), 8D, 2⅜″ Long, 50 Pounds Per Carton	1 lb.
*5315-010-6511	Nail, General Purpose (FF-N-105), 16D, 3¼″ Long, 50 Pounds Per Carton	½ lb.
*5315-161-8607	Nail, General Purpose (FF-N-105), 6D, 1⅞″ Long, 50 Pounds Per Carton	½ lb.
*5510-220-6078	Lumber, Soft Wood (MM-L-751), 1″ x 4″	6¼ bf.
*5510-220-6226	Lumber, Soft Wood, 4″ x 4″ (MM-L-751)	13⅓ bf.
*5530-554-8709	Plywood, Soft Wood (NN-P-530), ¾″ x 48″ x 96″ Sheet	65¾ sf.
6850-285-8012	Solvent, Dry Cleaning (P-D-680), 55 Gallon Drum	1 pt.
6850-753-4806	Cleaning Compound Solvent (MIL-C-372), 55 Gallon Drum	1 pt.
7510-161-0811	Ink, Marking, Stencil, Black (TT-I-559), 1 Gallon Can	(**)
7920-205-3570	Rag, Wiping (DDD-R-30), 50 Pound Bale	(**)
8135-132-9067	Fiberboard, Corrugated (PPP-F-320), 48″ x 96″ Sheet	10⅓ sf.
*8135-239-5293	Seal, Strapping, Closed Type W/O Ears ¾″, 1.7812 x 0.8075 Wide, 5,000 Per Box	3 ea.
8135-282-0565	Barrier Material, Water-Vaporproofed, Flexible (MIL-B-131), 36″ x 200 Yard Roll	1¾ yd.
*8135-282-0565	Barrier Material, Water-Vaporproofed, Flexible (MIL-B-131), 36″ x 200 Yard Roll	⅜ yd.
*8135-283-0669	Strapping, Steel, Nailless (QQ-S-781), ¾″ x 0.023″, 100 Pound Coil	40 ft.
8135-855-6969	Cushioning Material Cellulosic (PPP-C-843), ¾″ x 24″ x 167 Foot Package	5 ft.
8135-890-9873	Pressure Sensitive Tape (PPP-T-60), 2 x 60 Yard Roll	3¼ yd.
8135-985-7242	Paper, Volatile, Packaging (MIL-P-3420), 36 x 100 Foot Roll	3¾ ft.
9150-281-2007	Corrosion, Preventative Compound, Lubricating Oil, General Purpose (VV-L-800), 55 Gallon Drum.	1¼ oz.
9310-160-7858	Board, Stencil (UU-S-625), 100 sh	(**)

*Material Requirements for 20 each Machine Guns.
**These items will be required in addition to the packaging materials listed above and will be used as needed.

Bill of Materials

Name	No. req'd	Material	Dimensions	FSN
Ends	2	Plywood	36½″ x 34″ x ¾″	5530-554-8709
Sides	2	Plywood	48½″ x 34″ x ¾″	5530-554-8709
Top	1	Plywood	48½″ x 38″ x ¾″	5530-554-8709
Bottom	1	Plywood	48½″ x 38″ x ¾″	5530-554-8709
Skids	3	Wood	4″ x 4″ x 38″	5510-220-6226
Cleats	4	Wood	1″ x 4″ x 33¾″	5510-220-6078
Cleats	4	Wood	1″ x 4″ x 29⅛″	5510-220-6078

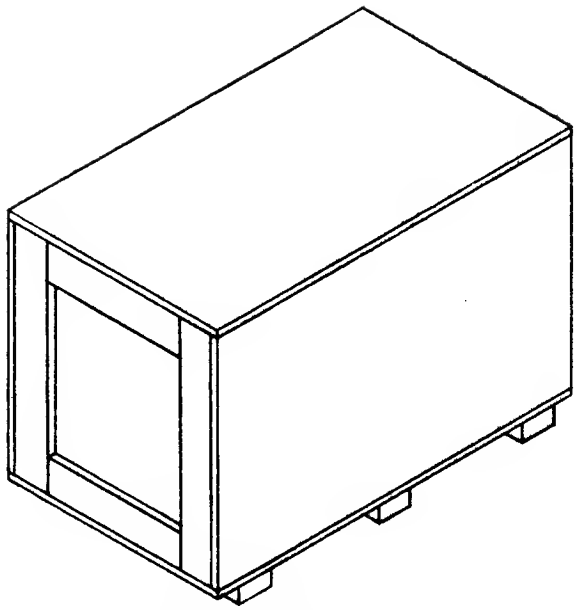

Figure A-33. Shipping container.

APPENDIX A–34

PREPARATION INSTRUCTIONS FOR SHIPMENT: SURFACE VESSEL TRANSPORT

FSN	ITEM DESCRIPTION
☐ 1005–714–2393	Machine Gun Cal. .30 Browning M1919 A4 Flexible.

PRESERVED: _____ _____ _____
(Month) (Day) (Year)

PRESERVED FOR A MAXIMUM OF 180 DAYS

NOTE:

Function: Relates to instructions to be accomplished in preparation of the equipment for shipment.

Mech: For initials of mechanic or responsible processing personnel to indicate function has been completed.

Insp: For initials of inspector certifying that function has been completed as indicated by the mechanic or processing personnel.

Step	Function	Mech	Insp
	a. Unit Responsibility.		
1	Assure that weapon and equipment are in good operating condition.		
2	Certify that weapon is free of ammunition in gun barrels, magazines and containers.		
3	Deliver complete weapon to designated processing site.		
4	Unit Commander, or representative, will remain with equipment until acceptance by responsible preservation site personnel.		
	b. Cleaning, Preservation, Packaging, Packing, and Marking.		
	WARNING		
	Before cleaning and packaging, Be Sure Weapon Is Clear. Do not actuate trigger until weapon has been cleared. Inspect chamber to insure that it is emptn and check to see that no ammunition is in position to be introduced. Avoid having live ammunition in vicinity of work area.		
1	Disassemble weapon as necessary to accomplish desired cleaning. Remove handle assembly operating slide for packaging purposes.		
2	Clean all metallic surfaces by wiping with rag (DDD–R–30) (7920–205–3570) saturated with cleaning solvent (MIL–C–372) (6850–753–4806).		
3	Clean barrel bore and chamber with swabs (1005–288–3565) saturated with bore cleaner (MIL–C–372) (6850–753–4806).		
4	Clean surfaces of parts having burned powder residue with a metallic bristle brush (1005–556–4174) saturated with bore cleaner (MIL–C–372) (6850–753–4806). Use rod furnished as "special tools".		
5	After cleaning with (MIL–C–372) (6850–753–4806) rinse with a dry cleaning solvent (P–D–680) (6850–285–8012).		
6	Drain and dry with compressed air or wiping rag (DDD–R–30) (7920–205–3570) changing drying position as necessary to accomplish thorough draining.		
7	Dry gun barrel and chambers with swabs (1005–288–3565).		
8	All surfaces, of machine gun, shall be thoroughly dried prior to preservation.		
9	Preserve all metallic surfaces with preservative oil (VV–L–800) (9150–281–2007).		
10	Completely drain off excess oil prior to reassembly and packaging.		
11	Insert a bore tube, volatile corrosion inhibitor (1005–336–0225) into barrel bore, extending tube one inch beyond barrel end and crimp over.		
12	Wrap retracting slide handle assembly in paper, volatile packaging (MIL–P–3420) (8135–985–7242), size 3″ x 5″.		

Step	Function	Mech	Insp
13	Wrap a piece of paper, volatile packaging (MIL–P–3420) (8135–985–7242) 4″ x 12″ around barrel jacket.		
14	Secure wrapped handle assembly securely to wrapped barrel jacket with (PPP–T–60) (8135–890–9873) tape, 2″ x 12″.		
15	Wrap machine gun in paper volatile packaging (MIL–P–3420) (8135–985–7242) size 24″ x 53″.		
16	Cushion wrapped machine gun with cellulosic material (PPP–C–843) (8135–855–6969) size 24″ x 53″.		
17	Secure cushioning with tape (PPP–T–60) (8135–890–9873) 2″ x 20″ (5 pieces required).		
18	Locate cushioned machine gun into a bag (MIL–B–131) (8135–282–0565) size, 14″ x 53″.		
19	Heat seal bag reducing the air volume in the bag to a practical minimum.		
20	Fabricate a fiberboard box 48⅞″ x 9″ x 6″, inside dimensions (8135–132–9067) (PPP–F–320).		
21	Cushioning material three (3) thickness (MIL–C–7769) (8135–132–9568), size 6″ x 9″, shall be located in *each* end of the container.		
22	Cushioning material two (2) thickness 9″ x 43″ (MIL–C–7769) (8135–132–9568) shall be located in bottom of fiberboard container.		
23	Locate bagged and cushioned machine gun in cushioned container.		
24	Locate two (2) additional pieces of cushioning material 9″ x 43″ (MIL–C–7769) (8135–132–9568) on top of wrapped machine gun.		
25	Close container with (PPP–T–60) (8135–890–9873) tape, 2″ x 51″ (2 pieces required).		
26	Apply three (3) girthwise straps of filament reinforced pressure sensitive tape (PPP–T–97) (8135–582–4772) 1″ x 36″ (3 pieces required).		
27	Apply the following information on each fiberboard container with stencil ink (TT–I–559) (7510–161–0811): 1005–714–2393 Machine Gun Cal. .30 M1914A4 1 Each Preserved on (month-day-year) for a maximum of 180 days Gross weight: 40 Cube: 1.75		
28	Assemble exterior shipping container, 50″ x 38¼″ x 32¾″. I.D. (See fig. A–34) with 8D nails (FF–N–105) (5315–010–6507) and apply skids with 10D nails (FF–N–105) (5315–010–6509).		
29	Pack twenty (20) machine guns in assembled shipping container.		
30	Close container with 8D nails (FF–N–105) (5315–010–6507).		
31	Apply three (3) steel straps girthwise around shipping container (QQ–S–781) (8135–283–0669), ¾″ x 157″ (3 pieces required).		
32	Secure strapping with seals (8135–239–5293) (3 each).		
33	Apply the following marking in 1″ letters, in cleated plywood box with stencil ink (TT–I–559) (7510–161–0811): 1005–714–2393 Machine Gun Cal. .30 M1914A4 20 Each Preserved on (month-day-year) for a maximum of 180 days Gross weight: 990 Cube: 46.231		

Step	Function	Mech	Insp
34	Preparation instructions sheet shall be completed and placed in a waterproof envelope (MIL-B-131) (8135-282-0565) size 10″ x 12″ and secured to the item container in a conspicuous location.		
	c. Deprocessing. Prior to placing this item in service, following receipt, deprocessing action will be in reverse of check list above.		

Table A-34-1. Packaging Materials List

FSN	Item description	Unit of use qty
1005-288-3565	Swab, Small Arms Cleaning, 2½″ x 2½″ 1,000 per package	10 ea.
1005-336-0225	Bore Tube VCI treated	1 ea.
*1005-556-4174	Brush, Cleaning, Small Arms Bore	1 ea.
*5315-010-6507	Nail, General Purpose (FF-N-105) 8D, 2⅜″ Long, 50 pounds per carton	1 lb.
*5315-010-6509	Nail, General Purpose (FF-N-105) 10D, 2⅞″ long, 50 pounds per carton	½ lb.
*5510-220-6078	Lumber, Soft Wood (MM-L-751) 1″ x 4″	7½ bf.
*5510-220-6194	Lumber, Soft Wood (MM-L-751), 2″ x 4″	4 bf.
*5530-554-8709	Plywood, Soft Wood (NN-P-530) ¾″ x 48″ x 96″ sheet	68 sf.
6850-285-8012	Solvent, Dry Cleaning (P-D-680) 55 Gallon Drum	1 pt.
6850-753-4806	Cleaning Compound Solvent (MIL-C-372) 55 gallon drum	1 pt.
7510-161-0811	Ink, Marking, Stencil, Black (TT-I-559) 1 gallon can	(**).
7920-205-3570	Rag, Wiping (DDD-R-30) 50 pound bale	(**).
8135-132-9067	Fiberboard, Corrugated (PPP-F-320), 48″ x 96″ sheet	12½ sf.
8135-132-9568	Cushioning, Bound Fiber (MIL-C-7769) 24″ x 72″ sheet	6 ft.
*8135-239-5293	Seal, Strapping, Closed Type W/O Ears, ¾″, 1.7812 x 0.8075 wide 5,000 per box	3 ea.
8135-282-0565	Barrier Material, Water-Vaporproofed Flexible (MIL-B-131) 36″ x 200 yard roll	1¼ yd.
*8135-282-0565	Barrier Material, Water-Vaporproofed Flexible (MIL-B-131) 36″ x 200 yard roll	⅜ yd.
*8135-283-0669	Strapping, Steel, Nailless (QQ-S-781) ¾″ x 0.023″, 100 pound coil	40 ft.
8135-582-4772	Filament-Reinforced Tape, Pressure Sensitive (PPP-T-97), 1″ x 60″ yard roll	3 yd.
8135-855-6969	Cushioning Material, Cellulosic (PPP-C-843), ¾″ x 24″ x 167 foot package	4½ ft.
8135-890-9873	Pressure, Sensitive Tape (PPP-T-60), Type IV, 2″ wide	6 yd.
8135-985-7242	Paper, Volatile, Packaging (MIL-P-3420), 36″ x 100 foot roll	3 ft.
9150-281-2007	Corrosion, Preventative Compound, Lubricating Oil, General Purpose (VV-L-800) 55 gallon drum.	1 pt.
9310-160-7858	Board, Stencil, UU-S-625 100 sh	(**).

*Material requirements for 20 machine guns.
**These items will be required in addition to the packaging materials listed above and will be used as needed.

Bill of Materials

Name	No. req'd	Material	Dimensions	FSN
Ends	2	Plywood	38¼″ x 32¾″ x ¾″	5530-554-8709
Cleats	4	Wood	4″ x 4″ x 39¾″	5510-220-6078
Cleats	4	Wood	1″ x 4″ x 31″	5510-220-6078
Sides	2	Plywood	53″ x 32¾″ x 14″	5530-554-8709
Top	1	Plywood	53″ x 39¾″ x ¾″	5530-554-8709
Bottom	1	Plywood	53″ x 39¾″ x ¾″	5530-554-8709
Skids	3	Wood	1″ x 4″ x 32¾″	5510-220-6226

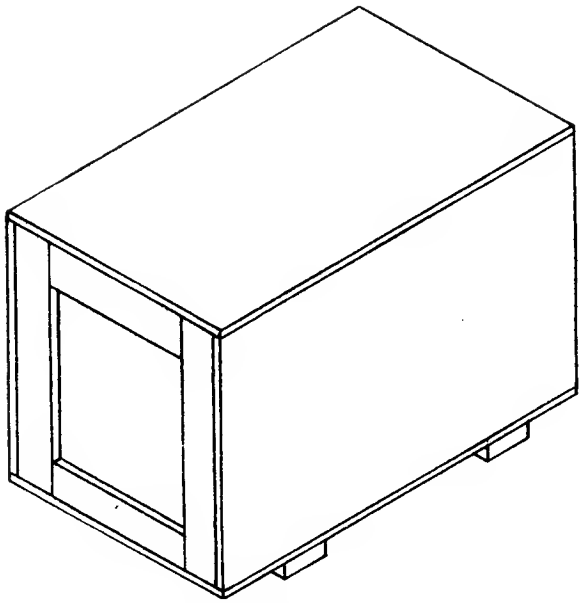

Figure A–34. Shipping Container.

APPENDIX A–35

PREPARATION INSTRUCTIONS FOR SHIPMENT: SURFACE VESSEL TRANSPORT

FSN	ITEM DESCRIPTION
☐ 1005–716–2946	Machine Gun, Caliber .30: M37.

PRESERVED: _____ _____ _____
(Month) (Day) (Year)

PRESERVED FOR A MAXIMUM OF 180 DAYS

NOTE:

Function: Relates to instructions to be accomplished in preparation of the equipment for shipment.

Mech: For initials of mechanic or responsible processing personnel to indicate function has been completed.

Insp: For initials of inspector certifying that function has been completed as indicated by the mechanic or processing personnel.

Step	Function	Mech	Insp
	a. Unit Responsibility.		
1	Assure that weapon and equipment are in good operating condition.		
2	Certify that weapon is free of ammunition in gun barrels, magazines and containers.		
3	Deliver complete weapon to designated processing area.		
4	Unit commander or representative will remain with equipment until acceptance by responsible preservation site personnel.		
	b. Cleaning, Preservation, Packaging, Packing and Marking.		
	WARNING		
	Before cleaning and packaging, Be Sure Weapon Is Clear. Do not actuate trigger until weapon has been cleared. Inspect chamber to insure that it is empty and check to see that no ammunition is in position to be introduced. Avoid having live ammunition in vicinity of work area.		
1	Disassemble weapon as necessary to accomplish desired cleaning.		
2	Clean all metallic surfaces by wiping with rag (DDD–R–30) (7920–205–3570) saturated with cleaning solvent (MIL–C–372) (6850–753–4806).		
3	Clean barrel bore and chamber with swabs (1005–288–3565) saturated with bore cleaner (MIL–C–372) (6850–753–4806).		
4	Clean surfaces of parts having burned powder residue with a metallic brush (1005–556–4174) saturated with bore cleaner (MIL–C–372) (6850–753–4806). Use rod furnished as "special tools".		
5	After cleaning with bore cleaner (MIL–C–372) (6850–753–4806) rinse with a dry cleaning solvent (P–D–680) (6850–285–8012).		
6	Drain and dry with compressed air or wiping rag (DDD–R–30) (7920–205–3570) changing drying position as necessary to accomplish thorough draining.		
7	Dry barrel bore and chamber with swabs (1005–288–3565).		
8	All cleaned surfaces of machine gun shall be thoroughly dried prior to preservation.		
9	Preserve all metallic surfaces with preservative oil (VV–L–800) (9150–281–2007).		
10	Completely drain off all excess oil prior to reassembly and packaging.		
11	Insert a bore tube volatile corrosion inhibitor (1005–336–0225) into barrel bore extending tube one inch beyond barrel end and crimp over.		

Step	Function	Mech	Insp
12	Wrap machine gun with barrel attached in paper volatile packaging (MIL–P–3420) (8135–985–7242), size 24″ x 48″.		
13	Wrapped gun shall be cushioned with cellulosic material (PPP–C–843) (8135–855–6969), 24″ x 48″.		
14	Secure cushioning with tape (PPP–T–60) (8135–890–9873), 2″ x 14″ (5 pieces).		
15	Locate wrapped and cushioned gun into a bag (MIL–B–131) (8135–282–0565) size 14″ x 48″.		
16	Heat seal bag reducing the air volume in the bag to a practical minimum.		
17	Locate bagged gun into a fiberboard box size 42¾″ x 9″ x 6″ I.D. (8135–132–9067).		
18	Cushioning 3 thickness of size 6″ x 9″ (6 required) shall belocated in each end of the container (MIL–C–7769) (8135–132–9568).		
19	Cushioning (MIL–C–7769) (8135–132–9568) 2 thicknesses of material 9″ x 36″ shall be used in bottom of container.		
20	Locate wrapped and cushioned machine gun in cushioned container.		
21	Locate two (2) additional pieces of cushioning material 9″ x 36″ (MIL–C–7769) (8135–132–9568) on top of the wrapped machine gun.		
22	Close container with tape (PPP–T–60) (8135–890–9873) 2″ x 46″ (2 pieces required).		
23	Locate two (2) pieces of filament reinforced pressure sensitive tape girthwise (PPP–T–97) (8135–582–4772) 1″ x 36″ (2 pieces required).		
24	Apply the following marking on each container with stencil ink (TT–I–559) (7510–161–0811): Federal Stock Number Item description 1 Each Preserved on (month-day-year) for a maximum of 180 days Gross Weight: 33.5 Cube: 1.54		
25	Assemble exterior shipping container 43½″ x 39¼″ x 38¼″ (see fig. A–35) with 8D nails (FF–N–105) (5315–010–6507), nails 6D (FF–N–105) (5315–161–8607) and for skids, use 10D nails (FF–N–105) (5315–010–6509).		
26	Pack 24 Machine Guns into the assembled shipping container.		
27	Close container as specified with 8D nails (FF–N–105) (5315–010–6507).		
28	Apply steel straps (QQ–S–781) (8135–283–0671) girthwise around container, 171″ x 1¼″ (3 required).		
29	Secure strapping with seals (8135–239–5294) (3 required).		
30	Apply the following marking in 1″ letters on the shipping container with stencil ink (TT–I–559) (7510–161–0811): Federal Stock Number Item description 24 each Preserved on (month-day-year) for a maximum of 180 days Gross weight: 981 Cube: 43.589		
31	Preparation instructions sheet shall be completed and placed in a waterproof envelope (MIL–B–131) (8135–282–0565) 10″ x 12″ and secured to the item/container in a conspicuous location.		
	c. Deprocessing. Prior to placing this item in service, following receipt, deprocessing action will be in reverse of checklist above.		

Table A-35. Packaging Materials List

FSN	Item description	Unit of use qty
1005-288-3565	Swab, Small Arms Cleaning, 2½'' x 2½'' 1,000 Per Package	10 ea.
1005-336-0225	Bore Tube, Volatile Inhibitor (MIL-P-3420) 0.19 O. D. x 28½'' Long	1 ea.
*1005-556-4174	Brush, Cleaning, Small Arms, Bore	1 ea.
*5315-010-6507	Nail, General Purpose (FF-N-105), 8D, 2⅜'' Long, 50 Pounds Per Carton	1 lb.
*5315-010-6509	Nail, General Purpose (FF-N-105), 10D, 2⅞'' Long, 50 Pounds Per Carton	½ lb.
*5315-161-8607	Nail, General Purpose (FF-N-105), 6D, 1⅞'' Long, 50 Pounds Per Carton	1 lb.
*5510-220-6078	Lumber, Soft Wood (MM-L-751) 1'' x 4''	9⅓ bf.
*5510-220-6194	Lumber, Soft Wood (MM-L-751) 2'' x 4''	6 bf.
*5530-554-8709	Plywood, Soft Wood (NN-P-530), ¾'' x 48'' x 96'' Sheet	53 sf.
6850-285-8012	Solvent, Dry Cleaning (P-D-680), 55 Gallon Drum	1 pt.
6850-753-4806	Cleaning Compound, Solvent (MIL-C-372), 55 Gallon Drum	1 pt.
7510-161-0811	Ink, Marking, Stencil, Black (TT-I-559) 1 Gallon Can	(**)
7920-205-3570	Rag, Wiping (DDD-R-30), 50 Pound Bale	(**)
8135-132-9067	Fiberboard, Corrugated (PPP-F-320), 48'' x 96'' Sheet	11½ sf.
8135-132-9568	Cushioning, Bound Fiber (MIL-C-7769), 24'' x 72'' Sheet	5 ft.
*8135-239-5294	Seal, Strapping, 1¼'', 1,000 per Box	3 ea.
8135-282-0565	Barrier Material, Water-Vaporproofed, Flexible (MIL-B-131), 36'' x 200 Yard Roll	1⅛ yd.
*8135-282-0565	Barrier Material, Water-Vaporproofed, Flexible (MIL-B-131), 36'' x 200 Yard Roll	⅓ yd.
*8135-283-0671	Strapping, Steel, Nailless (QQ-S-781), 1¼'' x 0.035'', 90 Pound Coil	42 ft.
8135-582-4772	Filament Reinforced Pressure Sensitive Tape (PPP-T-97), 1'' x 60 Yard Roll	2 yds.
8135-855-6969	Cushioning Material, Cellulosic (PPP-C-843), ¾'' x 24'' x 167 Foot Package	4 ft.
8135-890-9873	Pressure Sensitive Tape (PPP-T-60), 2'' x 60 Yard Roll	2¾ yds.
8135-985-7242	Paper, Volatile, Packaging (MIL-P-3420) 36'' x 100 Foot Roll	2⅔ ft.
9150-281-2007	Corrosion, Preventative Compound, Lubricating Oil, General Purpose (VV-L-800), 55 Gallon Drum.	1 pt.
9310-160-7858	Board, Stencil, UU-S-625 100 sh	(**)

*Material requirements for 24 machine guns.
**These items will be required in addition to the packaging materials listed above and will be used as needed.

Bill of Materials

Name	No. req'd	Material	Dimensions	FSN
Ends	2	Plywood	39¼'' x 38¼'' x ¾''	5530-554-8709
Cleats	4	Wood	1'' x 4'' x 38''	5510-220-6078
Cleats	4	Wood	1'' x 4'' x 32''	5510-220-6078
Sides	2	Plywood	46½'' x 38¼'' x ¾''	5530-554-8709
Top	1	Plywood	46½'' x 40¾'' x ¾''	5530-554-8709
Bottom	1	Plywood	46½'' x 40¾'' x ¾''	5530-554-8709
Skids	3	Wood	4'' x 4'' x 40¾''	5510-220-6226

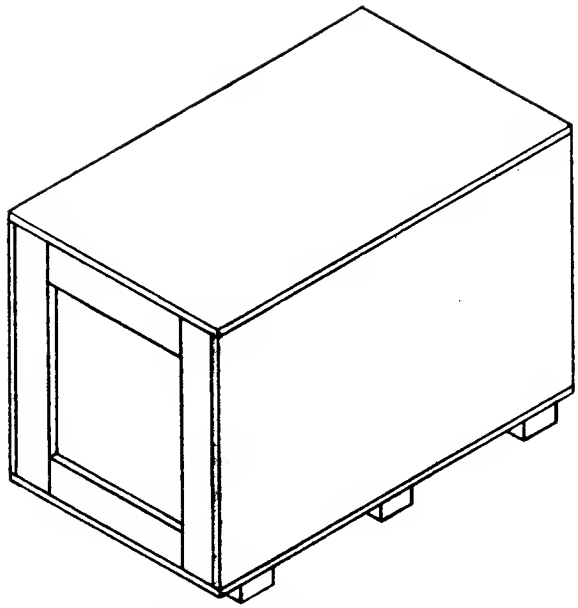

Figure A–35. Shipping Container.

APPENDIX A-36

PREPARATION INSTRUCTIONS FOR SHIPMENT: SURFACE VESSEL TRANSPORT

	FSN	ITEM DESCRIPTION
☐	1005-726-5666	Revolver, Cal .38, 2 Inch Barrel.
☐	1005-726-5687	Revolver, Cal .38, 4 Inch Barrel.
☐	1005-726-5786	Revolver, Cal .38, 2 Inch Barrel.
☐	1005-937-5839	Revolver, Cal .38, 4 Inch Barrel.
☐	1005-937-5840	Revolver, Cal .38, 2 Inch Barrel.

PRESERVED: _____ (Month) _____ (Day) _____ (Year)

PRESERVED FOR A MAXIMUM OF 180 DAYS

NOTE:

Function: Relates to instructions to be accomplished in preparation of the equipment for shipment.

Mech: For initials of mechanic or responsible processing personnel to indicate function has been completed.

Insp: For initials of inspector certifying that function has been completed as indicated by the mechanic or processing personnel.

	Step	Function	Mech	Insp
		a. Unit Responsibility.		
	1	Assure that weapon is in good operating condition.		
	2	Certify that weapon, magazines, and containers are free of ammunition and explosives.		
	3	As directed, weapon, complete with tools and equipment, will be delivered to designated processing site.		
	4	Unit Commander, or representative, will remain with equipment until acceptance by responsible preservation site personnel.		
		b. Cleaning, Preservation, Packaging, Packing and Marking.		
		WARNING Before cleaning and packaging, BE SURE WEAPON IS CLEAR. Do not actuate trigger until weapon has been cleared. Inspect chamber to insure that it is empty and check to see that no ammunition is in position to be introduced. Avoid having live ammunition in vicinity of work area.		
	1	Disassemble weapons as necessary to accomplish thorough cleaning.		
	2	Clean barrel bore, chamber, and any parts having heavy contaminants with a metallic brush (1005-903-1296) saturated with solvent cleaning compound (MIL-C-372), (6850-753-4806). Use rod furnished as "special tools."		
	3	Remove cleaner from bore using swab, small arms cleaning, size 2½" x 2½" (1005-288-3565).		
	4	Further cleaning of all surfaces shall be accomplished by complete immersion, or, by wiping with rag, wiping (DDD-R-30) (7920-205-3570) saturated with solvent, dry cleaning (P-D-680) (6850-285-8012), accompanied by scrubbing and agitation.		
	5	Position parts to allow complete drainage.		
	6	Rinse parts in clean solvent, dry cleaning (P-D-680) (6850-285-8012), to remove residues.		
	7	Drain and dry with compressed air, or, wipe with rag wiping (DDD-R-30), (7920-205-3570).		

Step	Function	Mech	Insp
8	Cleaning of canvas, webbing, synthetic materials, and wood, shall be by any process, or combination of processes which will accomplish thorough cleaning without damage to the item(s). Clean by brushing, wiping, etc.		
9	Reassemble weapon.		
10	Metallic surfaces of weapons shall be coated with corrosion preventative compound, lubricating oil, general purpose (VV–L–800) (9150–281–2007), applied by dipping.		
11	Drain excess oil from weapon, changing draining position as necessary to accomplish thorough drainage.		
12	Wrap pistol with a 12″ x 18″ piece of paper, volatile, packaging (MIL–P–3420) (8135–985–7242).		
13	Place each wrapped pistol in a 12″ x 12″ bag (MIL–B–131) (8135–282–0565).		
14	Close bag by heat sealing.		
15	Place sealed bag in a corrugated fiberboard box (PPP–F–320) (8135–132–9067) 8¾″ x 6¾″ x 2″.		
16	Fill void space of box with cushioning material, cellulosic (PPP–C–843) (8135–855–6969) 12″ x 12″.		
17	Seal the top center seam of box with tape, pressure sensitive (PPP–T–60) (8135–890–9873) 2″ x 12″.		
18	The following marking shall be applied to each unit container with ink, marking, stencil, black (TT–I–559) (7510–161–0811), using weight, specified below for each Federal stock number: Federal Stock Number Item description 1 Each Preserved on (month-day-year) for a maximum of 180 days Gross Weight: Cube: .090 *Weight* 1005–726–5666 ..... 2.65 1005–726–5687 ..... 3.01 1005–726–5786 ..... 2.65 1005–937–5839 ..... 3.01 1005–937–5840 ..... 2.65		
19	Assemble a cleated plywood shipping container, 36″ x 27¾″ x 24¼″, in accordance with figure A–36, using 8D nails (FF–N–105) (5315–010–6507), 10D nails (FF–N–105) (5315–010–6509) and 6D nails (FF–N–105) (5315–161–8607).		
20	Place 150 pistols, unit packaged as above, in a shipping container, figure A–36.		
21	Close shipping container with 8D nails (FF–N–105) (5315–010–6507).		
22	Secure shipping container with three (3) pieces of steel strapping (QQ–S–781) (8135–283–0669), ¾″ x 120″ long.		
23	Secure steel strapping with three seals, ¾″ (8135–239–5293).		
24	The following markings shall be applied to each shipping container, with minimum size 1″ letters, using ink, marking, stencil, black (TT–I–559) (7510–161–0811), using weight, specified below: Federal Stock Number Item Name 150 Each Preserved on (month-day-year) for a maximum of 180 days Gross Weight: Cube: 18.73 FSN: *Weight* 1005–726–5666 ..... 495.00 1005–726–5687 ..... 566.00 1005–726–5786 ..... 495.00 1005–937–5839 ..... 566.00 1005–937–5840 ..... 495.00		

Step	Function	Mech	Insp
25	Preparation instructions sheet shall be completed and placed in a waterproof envelope (MIL–B–131) (8135–282–0565), 10″ x 12″ and secured to the item/container in a conspicuous location.		
	c. Deprocessing. Prior to placing this item in service, following receipt, deprocessing action will be in reverse of check list above.		

Table A–36. Packaging Materials List

FSN	Item description	Unit of use qty
1005–288–3565	Swab, Small Arms Cleaning, 2½″ x 2½″, 1,000 per package	1 ea.
*1005–903–1296	Brush, Cleaning, Small Arms	1 ea.
**5315–010–6507	Nail, General Purpose (FF–N–105), 8D, 2⅜″ Lg., 50 Pounds per Carton	⅔ lb.
**5315–010–6509	Nail, General Purpose (FF–N–105), 10D, 2⅞″ Lg., 50 Pounds per Carton	1/10 lb.
**5315–161–8607	Nail, General Purpose (FF–N–105), 6D, 1⅞″ Lg., 50 Pounds per Carton	½ lb.
**5510–220–6078	Lumber, Soft Wood (MM–L–751), 1″ x 4″	5 bf.
**5510–220–6214	Lumber, Soft Wood (MM–L–751), 3″ x 4″	10 bf.
**5530–554–8709	Plywood, Soft Wood (NN–P–530), ¾″ x 48″ x 96″ Sheet	39 sf.
6850–285–8012	Solvent, Dry Cleaning (P–D–680), 55 Gallon Drum	1 pt.
6850–753–4806	Cleaning Compound, Solvent (MIL–C–372), 55 Gallon Drum	1 pt.
7510–161–0811	Ink, Marking, Stencil, Black (TT–I–559) 1 Gallon Can	(***)
7920–205–3570	Rag, Wiping (DDD–R–30), 50 Pound Bale	(***)
8135–132–9067	Fiberboard, Corrugated (PPP–F–320), 48″ x 96″ Sheet	2¼ sf.
**8135–239–5293	Seal, Strapping, Closed Type W/O Ears, ¾″, 1.7812 x 0.8075 Wide, 5,000 per Box	3 ea.
8135–282–0565	Barrier Material, Water-Vaporproofed, Flexible (MIL–B–131), 36″ x 200 Yard Roll	¼ yd.
**8135–282–0565	Barrier Material, Water-Vaporproofed, Flexible (MIL–B–131), 36″ x 200 Yard Roll	⅓ yd.
**8135–283–0669	Strapping, Steel, Nailless (QQ–S–781), ¾″ x 0.023″, 100 Pound Coil	30 ft.
8135–855–6969	Cushioning Material, Cellulosic (PPP–C–843), ¾″ x 24″ x 167 Foot Package	½ ft.
8135–890–9873	Pressure Sensitive Tape (PPP–T–60), 2″ x 60 Yard Roll	⅓ yd.
8135–985–7242	Paper, Volatile, Packaging (MIL–P–3420) 36″ x 100 Foot Roll	½ ft.
9150–281–2007	Corrosion, Preventative Compound, Lubricating Oil, General Purpose (VV–L–800), 55 Gallon Drum.	⅛ oz.
9310–160–7858	Board, Stencil, UU–S–625 100 sh	(***)

*Material requirements for 20 pistols.
**Material requirements for 150 pistols.
***These items will be required in addition to the packaging materials listed above and will be used as needed.

Bill of Materials

Name	Qty req'd	Material	Dimensions	FSN
Ends	2	Plywood	27¾″ x 24¼″ x ¾″	5530–554–8709
Sides	2	Plywood	39″ x 24¼″ x ¾″	5530–554–8709
Top	1	Plywood	39″ 29¼″ x ¾″	5530–554–8709
Bottom	1	Plywood	39″ x 29¼″ x ¾″	5530–554–8709
Cleat	4	Wood	1″ x 4″ x 24⅛″	5510–220–6078
Cleat	4	Wood	1″ x 4″ x 20½″	5510–220–6078
Skid	2	Wood	3″ x 4″ x 29¼″	5510–220–6214

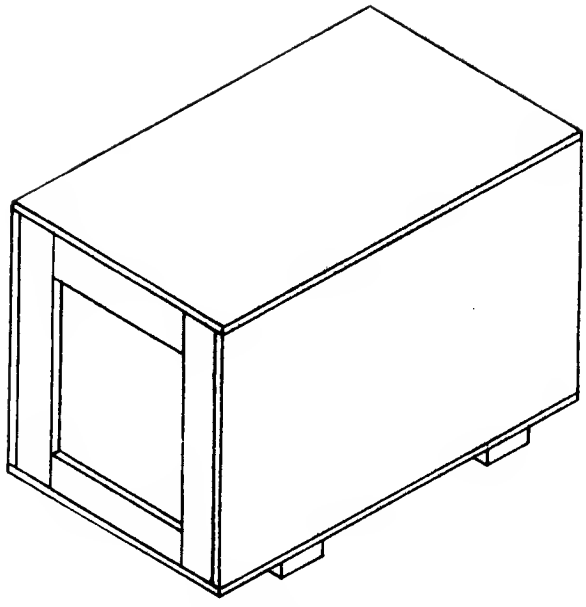

Figure A–36. Shipping container.

APPENDIX A–37

PREPARATION INSTRUCTIONS FOR SHIPMENT: SURFACE VESSEL TRANSPORT

	FSN	ITEM DESCRIPTION
☐	1005–903–0751	Machine Gun, 7.62MM, M134.

PRESERVED: _____ _____ _____
(Month) (Day) (Year)

PRESERVED FOR A MAXIMUM OF 180 DAYS

NOTE:

Function: Relates to instructions to be accomplished in preparation of the equipment for shipment.

Mech: For initials of mechanic or responsible processing personnel to indicate function has been completed.

Insp: For initials of inspector certifying that function has been completed as indicated by the mechanic or processing personnel.

Step	Function	Mech	Insp
	a. Unit Responsibility.		
1	Assure that weapon and equipment are in operating condition prior to movement to processing site.		
2	Certify that weapon, magazines and containers are free of ammunition.		
3	Deliver weapon, complete with tools and equipment, to designated processing site.		
4	Unit Commander, or representative, will remain with weapons until acceptance by responsible preservation site personnel.		
	b. Cleaning, Preservation, Packaging, Packing, and Marking.		
	WARNING Before cleaning and packaging, BE SURE WEAPON IS CLEAR. Do not actuate trigger until weapon has been cleared. Inspect chamber to insure that it is empty and check to see that no ammunition is in position to be introduced. Avoid having live ammunition in vicinity of work area.		
1	Disassemble weapon as necessary prior to cleaning.		
2	Clean barrel bore, chamber and any parts subjected to burned powder residues, with a metallic brush (1005–556–4174) saturated with solvent cleaning compound (MIL–C–372) (6850–753–4806). Use rod furnished as "special tools".		
3	Further cleaning of all metal parts shall be accomplished by complete immersion in solvent (P–D–680) (6850–285–8012), accompanied by scrubbing and agitation, or with solvent saturated rags (DDD–R–30) (7920–205–3570).		
4	Rinse parts with clean solvent (P–D–680) (6850–285–8012).		
5	Drain and dry cleaned parts with dry compressed air, or with rags (DDD–R–30) (7920–205–3570).		
6	The barrel bore and chamber shall be dried with swabs (1005–288–3565).		
7	Cleaning of canvas, webbing, synthetic materials and wood, shall be by any process, or combination of processes, which will accomplish thorough cleaning without damage to the item(s). Clean by brushing, wiping, etc.		
8	Reassemble weapon.		
9	Metallic surfaces of weapons shall be coated with corrosion preventative compound (VV–L–800) (9150–281–2007), applied by dipping.		

Step	Function	Mech	Insp
10	Drain excess oil from weapon changing draining position as necessary to accomplish thorough drainage.		
11	Insert a VCI treated bore tube (1005–336–0225) into barrel bore and bend protruding portion over the muzzle end.		
12	Wrap weapon in a piece of volatile paper (MIL–P–3420) (8135–985–7242) size 24″ x 36″.		
13	Secure wrap with tape (PPP–T–60) (8135–890–9873), size 2″ x 6″ (3 pieces required).		
14	Assemble the unit container, 33½″ x 7½″ x 7¾″ (see figure A–37–2) with 8D nails (FF–N–105) (5315–010–6507) and 6D nails (FF–N–105) (5315–161–8607).		
15	Place wrapped weapon in the unit container and apply a strip of cushioning material (PPP–C–843) (8135–855–6969), size 2″ x 50″, between wood blocking and the item (see fig. A–37–2 for wood blocking).		
16	Secure blocking with 6D nails (FF–N–105) (5315–161–8607).		
17	Secure lid of container with 8D nails (FF–N–105) (5315–010–6507).		
18	The following marking shall be applied to each shipping container with minimum size 1″ letters, using ink, marking, stencil, black (TT–I–559) (7510–161–0811): 1005–903–0751 Machine Gun, 7.62MM, M134 1 Each Preserved on (month-day-year) for a maximum of 180 days Gross Weight: 26.00 Cube: 1.77		
19	Assemble a shipping container 36¾″ x 36¼″ x 28″ (fig. A–37–2) with 8D nails (FF–N–105) (5315–010–6507), 10D nails (FF–N–105) (5315–010–6509) and 6D nails (FF–N–105) (5315–161–8607).		
20	Place twelve unit containers in shipping container.		
21	Secure lid with 8D nails (FF–N–105) (5315–010–6507).		
22	Apply steel strapping (QQ–S–781) (8135–283–0669) ¾″ x 142″ (2 pieces required).		
23	Secure strapping with seals (8135–239–5293).		
24	The following marking shall be applied to each shipping container with minimum size 1″ letters, using ink, marking, stencil, black (TT–I–559) (7150–161–0811): 1005–903–0751 Machine Gun, 7.62MM, M134 12 Each Preserved on (month-day-year) for a maximum of 180 days Gross Weight: 457.00 Cube: 27.62		
25	Preparation instructions sheets shall be completed and placed in a waterproof envelope (MIL–B–131) (8135–282–0565), size 10″ x 12″ and secured to the item/container in a conspicuous location.		
	c. Deprocessing. Prior to placing the item in service following receipt, deprocessing action, in reverse, of checklist must be completed.		

Table A-37. Packaging Materials List

FSN	Item description	Unit of use qty
1005-288-3565	Swab, Small Arms Cleaning, 2½'' x 2½'', 1000 Per Package	6 ea.
1005-336-0225	Tube, Bore, VCI Treated, .19 x 28½''	6 ea.
1005-556-4174	Brush, Cleaning, Small Arms, Bore	3 ea.
5315-010-6507	Nail, General Purpose (FF-N-105) 8D, 2⅜'' Long, 50 Pounds per Carton	⅛ lb.
*5315-010-6507	Nail, General Purpose (FF-N-105) 8D, 2⅜'' Long, 50 Pounds per Carton	⅜ lb.
*5315-010-6509	Nail, General Purpose (FF-N-105) 10D, 2⅞'' Long, 50 Pounds per Carton	⅛ lb.
5315-161-8607	Nail, General Purpose (FF-N-105) 6D, 1⅞'' Long, 50 Pounds per Carton	⅛ lb.
*5315-161-8607	Nail, General Purpose (FF-N-105) 6D, 1⅞'' Long, 50 Pounds per Carton	⅜ lb.
5510-220-6078	Lumber, Soft Wood (MM-L-751) 1'' x 4''	⅛ bf.
*5510-220-6078	Lumber, Soft Wood (MM-L-751) 1'' x 4''	6⅓ bf
5510-220-6200	Lumber, Soft Wood (MM-L-751), 2'' x 10''	1¾ bf.
*5510-220-6214	Lumber, Soft Wood (MM-L-751), 3'' x 4''	6¼ bf.
5530-554-8709	Plywood, Soft Wood (NN-P-530), ¾'' x 48'' x 96'' Sheet	9½ sf.
*5530-554-8709	Plywood, Soft Wood (NN-P-530), ¾'' x 48'' x 96'' Sheet	50 sf.
*8135-282-0565	Barrier Material, Water-vaporproofed, Flexible (MIL-B-131), 36'' x 200 Yard Roll	⅓ yd.
6850-285-8012	Solvent, Dry Cleaning (P-D-680), 55 Gallon Drum	1 qt.
6850-753-4806	Cleaning Compound Solvent (MIL-C-372), 55 Gallon Drum	1 qt.
7510-161-0811	Ink, Marking, Stencil, Black (TT-I-559), 1 Gallon Can	(**)
7920-205-3570	Rag, Wiping (DDD-R-30), 50 Pound Bale	(**)
*8135-239-5293	Seal, Strapping, Closed Type W/O Ears, ¾'', 1.7812 x 0.8075 Wide 5,000 per Box	2 ea.
*8135-283-0669	Strapping, Steel, Nailless (QQ-S-781), ¾'' x 0.023'', 100 Pound Coil	25 ft.
8135-855-6969	Cushioning Material, Cellulosie (PPP-C-843), ¾'' x 24'' x 167 Foot Package	⅓ ft.
8135-890-9873	Pressure Sensitive Tape (PPP-T-60), 2'' x 60 Yard Roll	½ yd.
8135-985-7242	Paper, Volatile, Packaging (MIL-P-3420), 36'' x 100 Foot Roll	2 ft.
9150-281-2007	Corrosion, Preventative Compound, Lubricating Oil, General Purpose (VV-L-800) 55 Gallon Drum.	1 qt.
9310-160-7858	Board, Stencil, UU-S-625 100 sh	(**)

*Material requirements for 12 weapons.
**These items will be required in addition to the paekaging materials listed above and will be used as needed.

Bill of Materials

Name	Qty req'd	Material	Dimensions	FSN
End	2	Wood	7½'' x 7¾'' x 2''	5510-220-6200
Side	2	Plywood	36¾'' x 7¾'' x ¾''	5530-554-8709
Top	1	Plywood	36¾'' x 9'' x ¾''	5530-554-8709
Bottom	1	Plywood	36¾'' x 9'' x ¾''	5530-554-8709
Guide Blocks	8	Wood	7¾'' x 1⅝'' x 1''	5510-220-6078
Block A	1	Plywood	7½'' x 3⅞'' x ¾''	5530-554-8709
Block B	1	Plywood	7½'' x 3⅞'' x ¾''	5530-554-8709

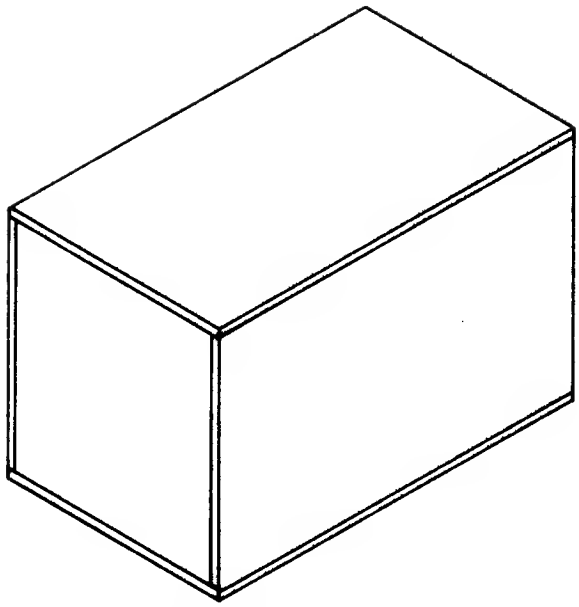

Figure A–37–1. Unit container.

BLOCK C - 1-5/8 x 3/4 x 7-3/4 (8 Req'd)

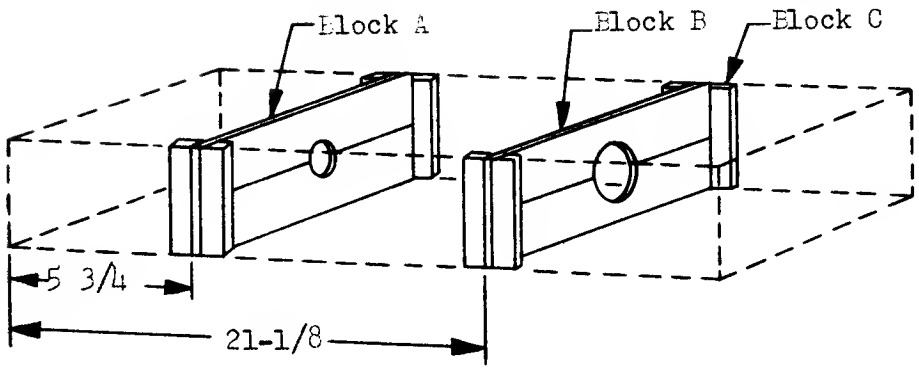

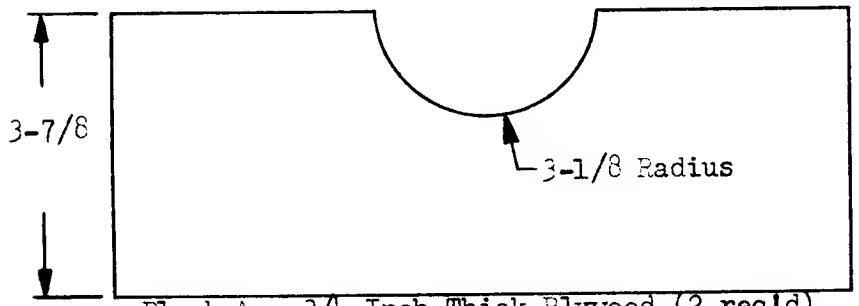

Block A - 3/4 Inch Thick Plywood (2 req'd)

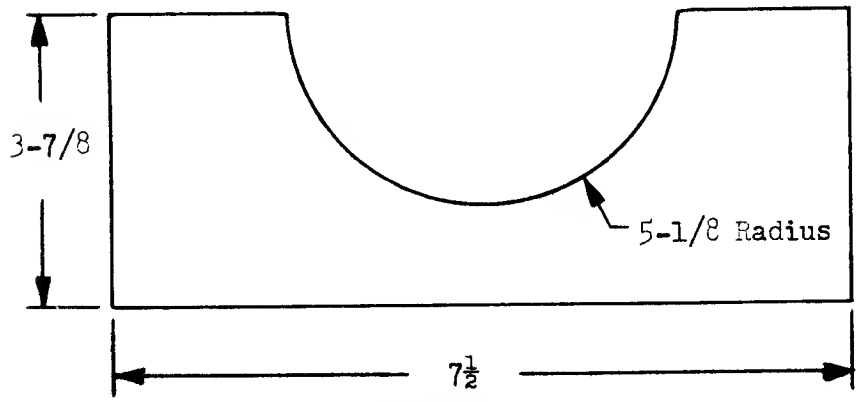

Block B - 3/4 Inch Thick Plywood (2 Req'd)

Figure A-37-2. Unit container blocking.

Bill of Materials

Name	Qty req'd	Material	Dimensions	FSN
End	2	Plywood	36¼'' x 28'' x ¾''	5530-554-8709
Side	2	Plywood	39⅜'' x 28'' x ¾''	5530-554-8709
Top	1	Plywood	39⅜'' x 37¾'' x ¾''	5530-554-8709
Bottom	1	Plywood	39⅜'' x 37¾'' x ¾''	5530-554-8709
Vertical Cleat	4	Wood	27⅞'' x 4'' x 1''	5510-220-6078
Horizontal Cleat	4	Wood	29'' x 4'' x 1''	5510-220-6078
Skid	2	Wood	37¾'' x 4'' x 3''	5510-220-6214

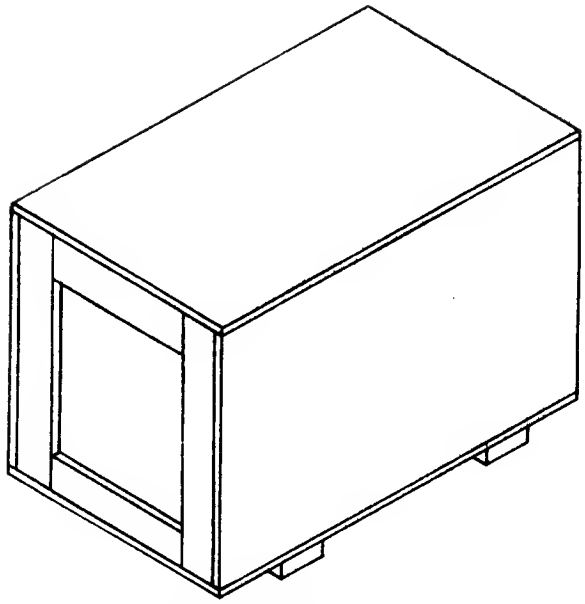

Figure A-37-3. Shipping container.

APPENDIX A-38

PREPARATION INSTRUCTIONS FOR SHIPMENT: SURFACE VESSEL TRANSPORT

FSN	ITEM DESCRIPTION
☐ 1005-930-5595	Submachinegun, 5.56MM, CAR-15, W/E.

PRESERVED: _____ (Month) _____ (Day) _____ (Year)

PRESERVED FOR A MAXIMUM OF 180 DAYS

NOTE:

Function: Relates to instructions to be accomplished in preparation of the equipment for shipment.

Mech: For initials of mechanic or responsible processing personnel to indicate function has been completed.

Insp: For initials of inspector certifying that function has been completed as indicated by the mechanic or processing personnel.

Step	Function	Mech	Insp
	a. Unit Responsibility.		
1	Assure that weapon and equipment are in operating condition prior to movement to processing site.		
2	Certify that weapon, magazines, and containers are free of ammunition.		
3	Deliver weapon, complete with tools and equipment, to designated processing site.		
4	Unit Commander or representative will remain with weapons until acceptance by responsible preservation site personnel.		
	b. Cleaning, Preservation, Packaging, Packing, and Marking.		
	WARNING Before cleaning and packaging, BE SURE WEAPON IS CLEAR. Do not actuate trigger until weapon has been cleared. Inspect chamber to insure that it is empty and check to see that no ammunition is in position to be introduced. Avoid having live ammunition in vicinity of work area.		
1	Disassemble weapon, as necessary, prior to cleaning.		
2	Clean barrel bore, chamber, and any parts subjected to burned powder residues, with a metallic brush (1005-903-1296) saturated with solvent cleaning compound (MIL-C-372) (6850-753-4806). Use rod furnished as "special tools."		
3	Further cleaning of all metal parts shall be accomplished by complete immersion in solvent (P-D-680) (6850-285-8012), accompanied by scrubbing and agitation or with solvent saturated rags (DDD-R-30) (7920-205-3570).		
4	Rinse parts with clean solvent (P-D-680) (6850-285-8012).		
5	Drain and dry cleaned parts with dry compressed air, or with rags (DDD-R-30) (7920-205-3570).		
6	The barrel bore and chamber shall be dried with swabs (1005-288-3565).		
7	Cleaning of canvas, webbing, synthetic materials, and wood shall be by any process or combination of processes which will accomplish thorough cleaning without damage to the item(s). Clean by brushing, wiping, etc.		
8	Reassemble weapon.		
9	Metallic surfaces of weapons shall be coated with corrosion preventative compound (VV-L-800) (9150-281-2007), applied by dipping.		

Step	Function	Mech	Insp
10	Drain excess oil from weapon, changing draining position as necessary to accomplish thorough drainage.		
11	Insert ½″ VCI treated bore tube (1005-336-0225) into barrel bore and bend protruding portion over the muzzle end.		
12	Wrap weapon with a piece of volatile paper (MIL-P-3420) (8135-985-7242) size 20″ x 36″.		
13	Insert wrapped weapon in a bag (MIL-B-131) (8135-282-0565) size 13″ x 34″.		
14	Clean sling by brushing or by wiping with rags (DDD-R-30) (7920-205-3570).		
15	Fold sling and wrap with a piece of volatile paper (MIL-P-3420) (8135-985-7242), size 9″ x 9″.		
16	Insert sling into bag with weapon, step 14.		
17	Close bag by heat sealing.		
18	Wrap bagged weapon with cushioning material (PPP-C-843) (8135-855-6969), size 24″ x 36″.		
19	Secure cushioning in place with tape (PPP-T-60) (8135-890-9873) 2″ x 36″.		
20	Place 4 packaged weapons, alternated in 2 layers, in a fiberboard box (PPP-F-320) (8135-132-9067), size 29½″ x 14″ x 9″. Separate each layer with 1 piece of fiberboard (PPP-F-320) (8135-132-9067) 14″ x 29″.		
21	Clean, dry, preserve and package Basic Issue Items in accordance with Table A-38-2, and as specified herein.		
22	Place all magazines (item 1, table A-38-2) together and wrap with a piece of barrier material (MIL-B-121) (8135-226-3124), 10″ x 16″.		
23	Secure wrap with tape (PPP-T-60) (8135-890-9873) 2″ x 4″, (3 pieces required).		
24	Wrap items 2, 3, and 4 (table A-38-2) with a piece of volatile paper (MIL-P-3420) (8135-985-7242) 4″ x 12″.		
25	Fold item 5 (table A-38-2) and secure with tape (PPP-T-60) (8135-890-9873), 2″ x 10″.		
26	Insert 4 sets of basic issue items in unit container.		
27	Cover packaged basic issue items with cushioning (PPP-C-843) (8135-855-6969), 12″ x 24″.		
28	Seal the center seams of top and bottom of the container with tape (PPP-T-60) (8135-890-9873), 2″ x 32″, (2 pieces required).		
29	The following marking shall be applied to each unit container with ink, marking, stencil, black (TT-I-559) (7510-161-0811): 1005-930-5595 Submachinegun, 5.56MM, CAR-15, W/E 4 Each Preserved on (month-day-year) for a maximum of 180 days Gross Weight: 45.00 Cube: 2.391		
30	Assemble a shipping container, 30¼″ x 29¼″ x 28¾″ (see fig. A-38) with 8D nails (FF-N-105) (5315-010-6507), 10D nails (FF-N-105) (5315-010-6509) and 6D nails (FF-N-105) (5315-161-8607).		
31	Place 6 unit containers in shipping container.		
32	Secure lid with 8D nails (FF-N-105) (5315-010-6507).		
33	Apply steel strapping (QQ-S-781) (8135-283-0669), ¾″ x 130″ (2 pieces required).		
34	Secure strapping with seals, ¾″ (8135-239-5293) (2 required).		
35	The following marking shall be applied to each shipping container with minimum size 1″ letters, using ink, marking, stencil, black (TT-I-559) (7510-161-0811): 1005-930-5595 Submachinegun, 5.56MM, CAR-15, W/E 24 Each Preserved on (month-day-year) for a maximum of 180 days Gross Weight: 386.00 Cube: 19.443		

Step	Function	Mech	Insp
36	Preparation instructions sheets shall be completed and placed in a waterproof envelope (MIL–B–131) (8135–282–0565), size 10″ x 12″ and secured to the item/container in a conspicuous location.		
	c. Deprocessing. Prior to placing this item in service following receipt, deprocessing action will be in reverse of check list above.		

Table A–38–1. Packaging Materials List

FSN	Item description	Unit of use qty
1005–288–3565	Swab, Small Arms, Cleaning, 2½″ x 2½″, 1,000 per Package	3 ea.
***1005–336–0225	Bore Tube, VCI Treated, .19 O.D. x 28½″	1 ea.
*1005–903–1296	Brush, Cleaning	1 ea.
*5315–010–6507	Nail, General Purpose (FF–N–105), 8D, 2⅜″ Lg., 50 Pound Carton	½ lb.
*5315–010–6509	Nail, General Purpose (FF–N–105), 10D, 2⅞″ Lg., 50 Pound Carton	⅛ lb.
*5315–161–8607	Nail, General Purpose (FF–N–105), 6D, 1⅞″ Lg., 50 Pound Carton	½ lb.
*5510–220–6078	Lumber, Soft Wood (MM–L–751) 1″ x 4″	6 bf.
*5510–220–6214	Lumber, Soft Wood (MM–L–751), 3″ x 4″	5⅛ bf.
*5530–554–8709	Plywood, Soft Wood (NN–P–530), ¾″ x 48″ x 96″ Sheet	38½ sf.
6850–285–8012	Solvent, Dry Cleaning (P–D–680), 55 Gallon Drum	1 pt.
6850–753–4806	Cleaning Compound Solvent (MIL–C–372) 55 Gallon Drum	1 pt.
7510–161–0811	Ink, Marking, Stencil, Black (TT–I–559), 1 Gallon Can	(****)
7920–205–3570	Rag, Wiping (DDD–R–30), 50 Pound Bale	(****)
**8135–132–9067	Fiberboard, Corrugated (PPP–F–320), 48″ x 96″ Sheet	7⅓ sf.
8135–226–3124	Barrier Material, Greaseproof, Waterproof Flexible (MIL–B–121) 36″ x 200 Yard Roll	⅛ yd.
*8135–239–5293	Seal, Strapping, Closed Type W/O Ears, ¾″, 1.7812 x 0.8075 Wide, 5000 per Box	2 ea.
8135–282–0565	Barrier Material, Water-Vaporproofed, Flexible (MIL–B–131) 36″ x 200 Yard Roll	¾ yd.
*8135–282–0565	Barrier Material, Water-Vaporproofed, Flexible (MIL–B–131) 36″ x 200 Yard Roll	⅓ yd.
*8135–283–0669	Strapping, Steel, Nailless (QQ–S–781) ¾″ x 0.023″, 100 Pound Coil	21¾ ft.
8135–855–6969	Cushioning Material, Cellulosic (PPP–C–843), ¾″ x 24″ x 167 Feet per Package	3 ft.
**8135–855–6969	Cushioning Material, Cellulosic (PPP–C–843), ¾″ x 24″ x 167 Feet per Package	1 ft.
8135–890–9873	Pressure Sensitive Tape (PPP–T–60), 2″ x 60 Yard Roll	1¾ yd.
**8135–890–9873	Pressure Sensitive Tape (PPP–T–60), 2″ x 60 Yard Roll	1¾ yd.
8135–985–7242	Paper, Volatile, Packaging (MIL–P–3420), 36″ x 100 Foot Roll	2 ft.
9150–281–2007	Corrosion, Preventative Compound, Lubricating Oil, General Purpose (VV–L–800), 55 Gallon Drum.	1 pt.
9310–160–7858	Board, Stencil, UU–S–625 100 sh	(****)

*Material requirements for 24 weapons.
**Material requirements for 4 weapons.
***Material requirements for 2 weapons.
****These items will be required in addition to the packaging materials listed above and will be used as needed.

Table A-38-2. Preservation for Basic Issue Items

Item No.	Item description	Qty Req'd	Cleaning	Drying	Preservative	Container	Container size	Container class	Mech	Insp
1	MagazineAssy	7	C-3	D-1						
2	Brush, Cleaning, Bore	1	C-3	(*)						
3	Brush, Cleaning, Chamber	1	C-3	(*)						
4	Rod, Cleaning, M11E3	1	C-3**	D-1						
5	Case, Maintenance Equipment	1	C-1	(*)						

EXPLANATION OF CODES

C-1 Any applicable method not injurious to the item. Normally accomplished by wiping with a dry rag (DDD-R-30) (7920-205-3570).

C-3 Wipe or scrub item with a rag (DDD-R-30) (7920-205-3570) saturated with drycleaning solvent (P-D-680) (6850-285-8012), or dip in solvent and brush clean.

D-1 Wipe with clean rag (DDD-R-30) (7920-205-3570) to insure removal of solvent.

P-9 Apply a light coat of corrosion preventative compound, lubricating oil, general purpose (VV-L-800) (9150-281-2007) by dipping or brushing.

P-18 Wrap item with paper volatile corrosion inhibitor (MIL-P-3420) (8135-985-7242). Place dull side of material to the inside and foil side to outside.

P-19 Apply a light coat of corrosion preventive compound (MIL-C-16173) (8030-526-1604) by dipping or brushing. Allow to dry before handling.

*Dry by using dry compressed air.
**Disassemble cleaning rod prior to cleaning operations.

NOTE

CONTAINERS:

E-Bag—Fabricated from (MIL-B-131) (8135-282-0565).
Box—Fabricated from (PPP-F-320) (8135-132-9067).
Bag closure—Heat Seal.
Box closure—RSC Cartons: Seal the center seams of top and bottom with tape (PPP-T-60) (8135-890-9873). OPF Cartons: Seal the top center seam with tape (PPP-T-60) (8135-890-9873).

Bill of Materials

Name	No. Req'd	Material	Dimensions	FSN
Ends	2	Plywood	29¼'' x 28¾'' x ¾''	5530-554-8709
Sides	2	Plywood	33¼'' x 28¾'' x ¾''	5530-554-8709
Top	1	Plywood	33¼'' x 30¾'' x ¾''	5530-554-8709
Bottom	1	Plywood	33¼'' x 30¾'' x ¾''	5530-554-8709
Vertical Cleat	4	Wood	3'' x 4'' x 30¾''	5510-220-6078
Horizontal Cleat	4	Wood	1'' x 4'' x 22''	5510-220-6078
Skids	2	Wood	1'' x 4'' x 28⅝''	5510-220-6214

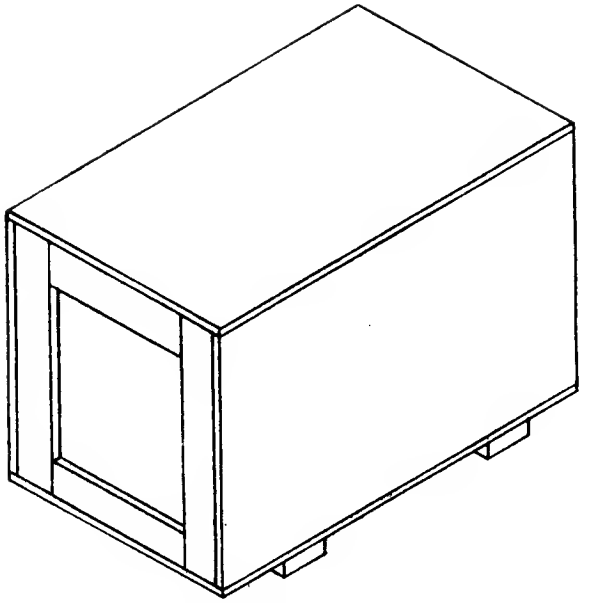

Figure A-38. Shipping Container.

APPENDIX A–39

PREPARATION INSTRUCTIONS FOR SHIPMENT: SURFACE VESSEL TRANSPORT

FSN	ITEM DESCRIPTION
☐ 1005–937–8777	Rifle, 7.62 Millimeter, M14, W/Telescope M84 and Mount, W/E.

PRESERVED: _____ (Month) _____ (Day) _____ (Year)

PRESERVED FOR A MAXIMUM OF 180 DAYS

NOTE:

Function: Relates to instructions to be accomplished in preparation of the equipment for shipment.

Mech: For initials of mechanic or responsible processing personnel to indicate function has been completed.

Insp: For initials of inspector certifying that function has been completed as indicated by the mechanic or processing personnel.

Step	Function	Mech	Insp
	a. Unit Responsibility.		
1	Assure that the weapon is in operating condition proir to movement to processing site.		
2	Certify that weapon, magazines and containers are free of ammunition.		
3	Deliver weapon, complete with tools and equipment to designated processing site.		
4	Unit commander or representative will remain with weapons until acceptance by responsible preservation site personnel.		
	b. Cleaning, Preservation, Packaging, Packing, and Marking.		
	WARNING Before cleaning and packaging, BE SURE WEAPON IS CLEAR. Do not actuate trigger until weapon has been cleared. Inspect chamber to insure that it is empty and check to see that no ammunition is in position to be introduced. Avoid having live ammunition in vicinity of work area.		
1	Remove telescope and mount.		
2	Disassemble weapon, as necessary, in preparation for thorough cleaning.		
3	Clean exterior surfaces of metal parts with a rag (DDD–R–30) (7929–205–3570), saturated with solvent cleaning compound (MIL–C–372) (6850–753–4806).		
4	Clean barrel bore, chamber and heavy contaminants of exterior metal surfaces with a snug fitting bristle brushes (1005–556–4174) (1005–690–8441), saturated with solvent cleaning compound (MIL–C–372) (6850–753–4806). Use rod furnished as "special tools".		
5	Further cleaning of metal parts shall be accomplished by complete immersion in dry-cleaning solvent (P–D–680) (6850–285–8012), accompanied by scrubbing and agitating or with a solvent-saturated rag (DDD–R–30) (7920–205–3570).		
6	Rinse parts with clean dry-cleaning solvent (P–D–680) (6850–285–8012).		
7	Drain and dry clean parts with dry compressed air or with wiping rags, (DDD–R–30) (7920–205–3570). The barrel bore and chamber shall be dried with clean swabs, (1005–288–3565). All clean surfaces shall be dried prior to preservative application.		

Step	Function	Mech	Insp
8	Cleaning of canvas, webbing, synthetic materials, and wood shall be by any process or combination of processes which will accomplish thorough cleaning without damage to the item(s) (brushing, wiping, etc.)		
9	Apply general purpose lubricating oil (VV–L–800) (9150–281–2007), to all metallic surfaces by any applicable procedure. Excess oil shall be drained prior to packaging.		
10	Insert a VCI treated bore tube (1005–336–0225), into bore of barrel bending protruding portion over the muzzle end.		
11	Wrap weapon with a piece of volatile paper (MIL–P–3420) (8135–985–7242), 18″ x 48″.		
12	Wrap sling, Item 1 (table A–39–2), with volatile paper (MIL–P–3420) (8135–985–7242), 8″ x 12″.		
13	Insert weapon and sling in a barrier bag (MIL–B–131) (8135–282–0565), 12″ x 50″.		
14	Close bag by heat sealing.		
15	Wipe telescope clean with cleaning rags (DDD–R–30) (7920–205–3570).		
16	Clean mount with solvent saturated rag (DDD–R–30) (7920–205–3570), allowing adequate draining and drying time before packaging.		
17	Cover lenses of telescope with lens paper (NNN–P–40) (6640–224–7758), (2 pieces required).		
18	Secure in place with pressure sensitive tape (PPP–T–60) (8135–890–9873), 2″ x 8″ (2 pieces required).		
19	Wrap telescope with cushioning material (PPP–C–843) (8135–855–6969), 12″ x 24″ (2 pieces required).		
20	Secure cushioning with pressure sensitive tape (PPP–T–60) (8135–890–9873), 2″ x 6″ (4 pieces required).		
21	Wrap mount with a piece of volatile paper (MIL–P–3420) (8135–985–7242) 9″ x 9″.		
22	Overwrap mount with cushioning material (PPP–C–843) (8135–855–6969), 9″ x 9″.		
23	Secure cushioning with pressure sensitive tape (PPP–T–60) (8135–890–9873), 2″ x 6″ (4 pieces required).		
24	Place cushioned telescope and mount in a barrier bag (MIL–B–131) (8135–282–0565), 10″ x 18″.		
25	Close bag by heat sealing.		
26	Wrap each bagged weapon with cushioning material, (PPP–C–843) (8135–855–6969), 18″ x 48″.		
27	Secure cushioning with pressure sensitive tape (PPP–T–60) (8135–890–9873), 2″ x 6″ (4 pieces required).		
28	Position four bag-cushioned weapons alternately within a corrugated fiberboard box (PPP–F–320) (8135–132–9067), 45½″ x 21½″ x 5½″.		
29	Cover weapons with cushioning material (PPP–C–843) (8135–855–6969), 22″ x 48″.		
30	Position one piece of corrugated fiberboard (PPP–F–320) (8135–132–9067), 21″ x 45″ in container.		
31	Cover fiberboard with cushioning material (PPP–C–843) (8135–855–6969), 22″ x 48″.		
32	Position four bag-cushioned telescopes with mounts in container.		
33	Clean, dry, preserve and package Basic Issue Items in accordance with table A–39–2 and as specified herein.		
34	Wrap items 2, 3, and 4 (table A–39–2) in volatile paper (MIL–P–3420) (8135–985–7242), 6″ x 10″.		
35	Place items 2 thru 8 (table A–39–2) in a barrier bag (MIL–B–131) (8135–282–0565), 10″ x 12″.		
36	Close bag by heat sealing.		
37	Wrap magazines, item 9 (table A–39–2), with volatile paper (MIL–P–3420) (8135–985–7242), 9″ x 9″ (5 pieces required).		
38	Insert wrapped magazines in a barrier bag (MIL–B–131) (8135–282–0565), 10″ x 12″.		

Step	Function	Mech	Insp
39	Close bag by heat sealing.		
40	Insert four sets of packaged Basic Issue Items in container.		
41	Cover bagged items with cushioning material (PPP–C–843) (8135–855–6969), 22″ x 48″.		
42	Close box and seal with pressure sensitive tape (PPP–T–60) (8135–890–9873) 2″ x 50″ (2 pieces required).		
43	The following marking shall be applied to each unit container with ink, marking, stencil, black (TT–I–559) (7510–161–0811): 1005–937–8777 Rifle, 7.62 Millimeter, M14 W/Telescope M84 and Mount W/E 4 Each Preserved on (month-day-year) for a maximum of 180 days Gross weight: 64.00 Cube: 3.500		
44	Assemble a shipping container 46″ x 44″ x 30″ (see fig. A–39) utilizing 8D nails (FF–N–105) (5315–010–6507); 16D nails (FF–N–105) (5315–010–6511) and 6D nails (FF–N–105) (5315–161–8607).		
45	Pack 10 rifle containers, unit packaged as above, in assembled shipping container.		
46	Close container with 8D nails (FF–N–105) (5315–010–6507).		
47	Secure container with steel strapping (QQ–S–781) (8135–283–0669) 164″ x ¾″ (3 required).		
48	Secure strapping with seal (8135–239–5293) (3 required).		
49	Mark each shipping container with stencil, ink (TT–I–559) (7510–161–0811), as follows: 1005–937–8777 Rifle, 7.62 Millimeter, M14, W/Telescope M84 and Mount W/E 40 Each Preserved on (month-day-year) for a maximum of 180 days Gross weight: 822.00 Cube: 49.260		
50	Preparation instructions sheets shall be completed and placed in a waterproof envelope (MIL–B–131) (8135–282–0565) 10″ x 12″ and secured to the item/container in a conspicuous location.		
	c. Deprocessing. Prior to placing this item in service, following receipt, deprocessing action will be in reverse of checklist above.		

Table A–39–1. Packaging Materials List

FSN	Item description	Unit of use qty
1005–288–3565	Swab, Small Arms Cleaning, 2½″ x 3½″, 1,000 Per Package	3 ea.
1005–336–0225	Tube, Bore, VCI Treated, .19 O.D. x 28½″	1 ea.
*1005–556–4174	Brush, Cleaning, Small Arms: Bore	1 ea.
*1005–690–8441	Brush, Cleaning, Small Arms, Chamber	1 ea.
*5315–010–6507	Nail, General Purpose (FF–N–105), 8D, 2⅜″ Long, 50 Pounds Per Carton	½ lb.
*5315–010–6511	Nail, General Purpose (FF–N–105), 16D, 3¼″ Long, 50 Pounds Per Carton	⅓ lb.
*5315–161–8607	Nail, General Purpose (FF–N–105), 6D, 1⅞″ Long, 50 Pounds Per Carton	⅛ lb.
*5510–220–6078	Lumber, Soft Wood (MM–L–751), 1″ x 4″	8 bf.
*5510–220–6226	Lumber, Soft Wood (MM–L–751), 4″ x 4″	13¼ bf.
*5530–554–8709	Plywood, Soft Wood (NN–P–530), ¾″ x 48″ x 96″ Sheet	69¾ sf.
6640–224–7758	Paper, Lens Tissue (NNN–P–40) 20″ x 30″, 50 Sheets Per Package	2 sh.
6850–285–8012	Solvent, Dry Cleaning (P–D–680) 55 Gallon Drum	1 pt.
6850–753–4806	Cleaning Compound Solvent (MIL–C–372) 55 Gallon Drum	1 pt.

See footnotes at end of table.

Table A-39-1. Packaging Materials List—Continued

FSN	Item description	Unit of use qty
7510-161-0811	Ink, Marking, Stencil, Black (TT-I-559), 1 Gallon Can	(***)
7920-205-3570	Rag, Wiping (DDD-R-30) 50 Pound Bale	(***)
**8135-132-9067	Fiberboard, Corrugated (PPP-F-320) 48" x 96" Sheet	32¼ sf.
*8135-239-5293	Seal, Strapping, Closed Type W/Ears, ¾", 1.7812 x 0.8075 Wide, 5,000 Per Box	3 ea.
8135-282-0565	Barrier Material, Water-Vaporproofed, Flexible (MIL-B-131), 36" x 200 Yard Roll	3½ yd.
*8135-282-0565	Barrier Material, Water-Vaporproofed, Flexible (MIL-B-131). 36" x 200 Yard Roll	⅓ yd.
**8135-282-0565	Barrier Material, Water-Vaporproofed, Flexible (MIL-B-131), 36" x 200 Yard Roll	2¼ yd.
*8135-283-0669	Strapping, Steel, Nailless (QQ-S-781), ¾" x 0.023", 100 Pound Coil	41 ft.
8135-855-6969	Cushioning Material Cellulosic (PPP-C-843), ¾" x 24" x 167 Foot Package	5 ft.
**8135-855-6969	Cushioning Material Cellulosic (PPP-C-843), ¾" x 24" x 167 Foot Package	11 ft.
8135-890-9873	Pressure Sensitive Tape (PPP-T-60), 2" x 60 Yard Roll	2½ yd.
**8135-890-9873	Pressure Sensitive Tape (PPP-T-60), 2" x 60 Yard Roll	2½ yd.
8135-985-7242	Paper, Volatile, Packaging (MIL-P-3420) 36" x 100 Foot Roll	3⅓ ft.
9150-281-2007	Corrosion Preventative Compound, Lubricating Oil, General Purpose, (VV-L-800), 55 Gallon Drum.	1¼ oz.
9310-160-7858	Board, Stencil, UU-S-625 100 sh	(***)

*Material requirements for 40 rifles.
**Material requirements for 4 rifles.
***These items will be required in addition to the packaging materials listed above and will be used as needed.

Table A-39-2. Preservation for Basic Issue Items

Item No.	Item description	Cleaning	Drying	Preservative	Container	Container size	Container class	Mech	Insp
1	Sling, Small Arms: M1 Webbing	C-1							
2	Combination Tool	C-3	D-1						
3	Swab Holder Section, Small Arms Cleaning Rod	C-3	D-1						
4	Rod Section Cleaning, Small Arms	C-3	D-1						
5	Case, Small Arms Cleaning Rod	C-1							
6	Brush, Cleaning, Small Arms: Chamber	C-1							
7	Brush, Cleaning, Small Arms: Bore	C-1							
8	Case Lubricant	C-1							
9	Magazine, Cartridge (20 Cartridges)	C-3	D-1						

EXPLANATION OF CODES

C-1 Any applicable method not injurious to the item. Normally accomplished by wiping with a dry rag (DDD-R-30) (7920-205-3570).

C-3 Wipe or scrub item with a rag (DDD-R-30) (7920-205-3570) saturated with dry-cleaning solvent (P-D-680) (6850-285-8012), or dip in solvent and brush clean.

D-1 Wipe with clean rag (DDD-R-30) (7920-205-3570) to insure removal of solvent.

P-9 Apply a light coat of corrosion preventative compound, lubricating oil, general purpose (VV-L-800) (9150-281-2007) by dipping or brushing.

P-18 Wrap item with paper volatile corrosion inhibitor (MIL-P-3420) (8135-985-7242). Place dull side of material to the inside and foil side to outside.

P-19 Apply a light coat of corrosion preventive compound (MIL-C-16173) (8030-526-1604) by dipping or brushing. Allow to dry before handling.

NOTE

CONTAINERS:

E-Bag—Fabricated from (MIL-B-131) (8135-282-0565).
Box—Fabricated from (PPP-F-320) (8135-132-9067).
Bag closure—Heat seal.
Box closure—RSC Cartons: Seal the center seams of top and bottom with tape (PPP-T-60) (8135-890-9873). OPF Cartons: Seal the top center seam with tape (PPP-T-60) (8135-890-9873).

Bill of Materials

Name	No. req'd	Material	Dimensions	FSN
Ends	2	Plywood	44'' x 30'' x ¾''	5530–554–8709
Sides	2	Plywood	49'' x 30'' x ¾''	5530–554–8709
Top	1	Plywood	49'' x 45½'' x ¾''	5530–554–8709
Bottom	1	Plywood	49'' x 45½'' x ¾''	5530–554–8709
Skids	3	Wood	4'' x 4'' x 45½''	5510–220–6226
Cleats	4	Wood	1'' x 4'' x 29¾''	5510–220–6078
Cleats	4	Wood	1'' x 4'' x 36⅝''	5510–220–6078

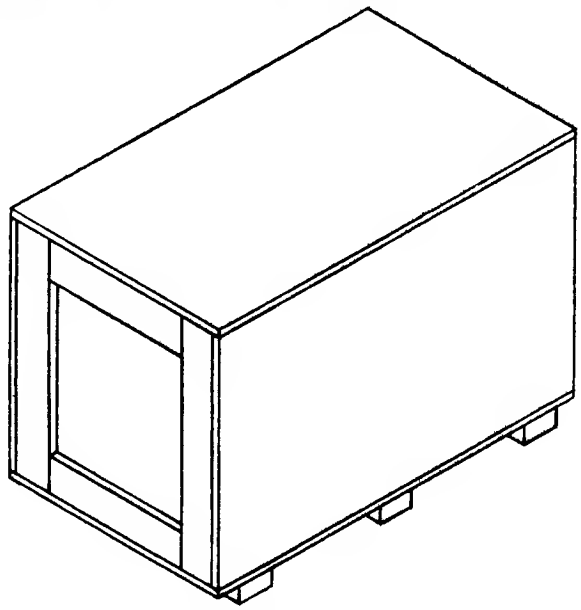

Figure A–39. Shipping container.

APPENDIX A–40

PREPARATION INSTRUCTIONS FOR SHIPMENT: SURFACE VESSEL TRANSPORT

FSN	ITEM DESCRIPTION
☐ 1005–952–4063	Shotgun, 12 Gage, Riot Type Stevens, Model 77E, W/E.

PRESERVED: _____ _____ _____
(Month) (Day) (Year)

PRESERVED FOR A MAXIMUM OF 180 DAYS

NOTE:

Function: Relates to instructions to be accomplished in preparation of the equipment for shipment.

Mech: For initials of mechanic or responsible processing personnel to indicate function has been completed.

Insp: For initials of inspector certifying that function has been completed as indicated by the mechanic or processing personnel.

Step	Function	Mech	Insp
	a. Unit Responsibility.		
1	Assure that weapon is in operating condition prior to movement to processing site.		
2	Certify that weapon and containers are free of ammunition.		
3	Deliver weapon, complete with tools and equipment, to designated processing site.		
4	Unit Commander or respresentative will remain with weapons until acceptance by responsible preservation site personnel.		
	b. Cleaning, Preservation, Packaging, Packing and Marking.		
	WARNING		
	Before cleaning and packaging, Be Sure Weapon Is Clear. Do not actuate trigger until weapon has been cleared. Inspect chamber to insure that it is empty and check to see that no ammunition is in position to be introduced. Avoid having live ammunition in vicinity of work area.		
1	Disassemble weapon as necessary in preparation for thorough cleaning.		
2	Clean barrel bore, chamber and heavy contaminants of exterior surfaces with rags (DDD–R–30) (7920–205–3570), saturated with solvent cleaning compound (MIL–C–372) (6850–753–4806).		
3	Further cleaning of metal parts shall be accomplished by complete immersion in dry cleaning solvent (P–D–680) (6850–285–8012), accompanied by scrubbing and agitation or with a solvent-saturated rag (DDD–R–30) (7920–205–3570).		
4	Rinse parts with clean dry-cleaning solvent (P–D–680) (6850–285–8012).		
5	Drain and dry clean parts with dry compressed air or with wiping rags (DDD–R–30) (7920–205–3570). The barrel bore and chamber shall be dried prior to preservative application.		
6	Cleaning of canvas, webbing, synthetic materials, and wood shall be by any process or combination of processes which will accomplish thorough cleaning without damage to the item(s) (brushing, wiping, etc.).		
7	Apply general purpose lubricating oil (VV–L–800) (9150–281–2007), to all metallic surfaces by any applicable procedure. Excess oil shall be drained prior to packaging.		
8	After cutting VCI treated bore tube (1005–336–0216), in half (½), insert into bore of barrel behind protruding portion over the muzzle end.		
9	Fold sling and wrap with a piece of volatile paper (MIL–P–3420) (8135–985–7242), 8″ x 12″.		

Step	Function	Mech	Insp
10	Wrap weapon with a piece of volatile paper (MIL–P–3420) (8135–985–7242), 18″ x 44″.		
11	Wrap cleaning rod with a piece of volatile paper (MIL–P–3420) (8135–985–7242), 4″ x 38″.		
12	Insert weapon, sling and cleaning rod in a barrier bag (MIL–B–131) (8135–282–0565), 12″ x 44″.		
13	Close by heat sealing.		
14	Wrap each bagged weapon with cushioning material (PPP–C–843) (8135–855–6969), 18″ x 48″.		
15	Secure cushioning material with pressure sensitive tape (PPP–T–60) (8135–890–9873), 2″ x 6″ (4 pieces required).		
16	Position four (4) bag-cushioned weapons alternately in a corrugated fiberboard box (PPP–F–320) (8135–132–9067), 41½″ x 21½″ x 3½″.		
17	Cover weapons with cushioning material (PPP–C–843) (8135–855–6969), 22″ x 42″.		
18	Close fiberboard box with 2 pieces pressure sensitive tape (PPP–T–60) (8135–890–9873) 2″ x 46″.		
19	The following marking shall be applied to each unit container with ink, marking, stencil, black (TT–I–559) (7510–161–0811): 1005–952–4063 Shotgun, 12 Gage, Riot Type Stevens, MODEL 77E, W/E 4 Each Preserved on (month-day-year) for a maximum of 180 days Gross Weight: 38.40 Cube: 2.139.		
20	Assemble shipping container (see fig. A–40) 44″ x 42″ x 40″, utilizing 8D nails (FF–N–105) (5315–010–6507).		
21	Pack twenty (20) shotgun containers, unit packaged as above, in assembled shipping container.		
22	Close shipping container utilizing 8D nails (FF–N–105) (5315–010–6507).		
23	Apply strapping to shipping container (QQ–S–781) (8135–283–0669), 3″ x 180″ (3 pieces).		
24	Secure strapping with seals (8135–239–5293) (3 required).		
25	The following marking shall be applied to each shipping container with minimum size 1″ letters using ink, marking, stencil, black (TT–I–559) (7510–161–0811): 1005–952–4063 Shotgun, 12 Gage, Riot Type, Stevens Model 77E, W/E 80 Each Preserved on (month-day-year) for a maximum of 180 days Gross Weight: 954.00 Cube: 55.078		
26	Preparation instructions sheets shall be completed and placed in a waterproof envelope (MIL–B–131) (8135–282–0565), size 10″ x 12″ and secured to the item/container in a conspicuous location.		
	c. Deprocessing Prior to placing this item in service, following receipt, deprocessing action will be in reverse of check list above.		

Table A–40. Packaging Materials List

FSN	Item description	Unit of use qty
1005–288–3565	Swab, Small Arms Cleaning, 2½″ x 2½″, 1,000 Per Pack	4 ea.
*1005–336–0216	Tube, Bore, VCI Treated, 00.45 OD x 45½″	1 ea.
**5315–010–6507	Nail, General Purpose (FF–N–105), 8D, 2⅜″ Long, 50 Pounds Per Carton	⅔ lb.
**5315–010–6511	Nail, General Purpose (FF–N–105), 16D, 3¼″ Long, 50 Pounds Per Carton	⅓ lb.
**5315–161–8607	Nail, General Purpose (FF–N–105), 6D, 1⅞″ Long, 50 Pounds Per Carton	⅓ lb.

See footnotes at end of table.

Table A–40. Packaging Materials List—Continued

FSN	Item description	Unit of use qty
**5510–220–6078	Lumber, Soft Wood (MM–L–751), 1″ x 4″	8 bf.
**5510–220–6226	Lumber, Soft Wood (MM–L–751), 4″ x 4″	13¼ bf.
**5530–554–8709	Plywood, Soft Wood (NN–P–530), ¾″ x 48″ x 96″ Sheet	76 sf.
6850–285–8012	Solvent, Dry Cleaning (P–D–680), 55 Gallon Drum	1 pt.
6850–753–4806	Cleaning Compound Solvent (MIL–C–372), 55 Gallon Drum	1 pt.
7510–161–0811	Ink, Marking, Stencil, Black (TT–I–559), 1 gallon Can	(****)
7920–205–3570	Rag, Wiping (DDD–R–30), 50 Pound Bale	(****)
***8135–132–9067	Fiberboard, Corrugated (PPP–F–320), 48″ x 96″ Sheet	22¾ sf.
**8135–239–5293	Seal, Strapping, Closed Type W/O Ears, ¾″, 1.7812 x 0.8075 Wide, 5,000 Per Box	3 ea.
8135–282–0565	Barrier Material, Water-Vaporproofed, Flexible (MIL–B–131), 36″ x 200 Yard Roll	¾ yd.
**8135–282–0565	Barrier Material, Water-Vaporproofed, Flexible (MIL–B–131), 36″ x 200 Yard Roll	⅓ yd.
**8135–283–0669	Strapping, Steel, Nailless (QQ–S–781), ¾″ x 0.023″ 100 Pound Coil	45 ft.
8135–855–6969	Cushioning Material, Cellulosic (PPP–C–843), ¾″ x 24″ x 167 Foot Package	4¼ ft.
***8135–855–6969	Cushioning Material, Cellulosic (PPP–C–843), ¾″ x 24″ x 167 Foot Per Package	2 ft.
8135–890–9873	Pressure Sensitive Tape (PPP–T–60), 2″ x 60 Yard Roll	¾ yd.
***8135–890–9873	Pressure Sensitive Tape (PPP–T–60), 2″ x 60 Yard Roll	2¾ yd.
8135–985–7242	Paper, Volatile, Packaging (MIL–P–3420), 36″ x 100 Foot Roll	2½ ft.
9150–281–2007	Corrosion, Preventative Compound Lubricating Oil, General Purpose (VV–L–800), 55 Gallon Drum.	⅛ oz.
9310–160–7858	Board, Stencil, UU–S–625, 100 sh	(****)

*Material specified for 2 shotguns.
**Material specified for 80 shotguns.
***Material specified for 4 shotguns.
****These items will be required in addition to the packaging materials listed above and will be used as needed.

Bill of Materials

Name	No. req'd	Material	Dimensions	FSN
Ends	2	Plywood	42″ x 40″ x ¾″	5530–554–8709
Sides	2	Plywood	47″ x 40″ x ¾″	5530–554–8709
Top	1	Plywood	47″ x 43½″ x ¾″	5530–554–8709
Bottom	1	Plywood	47″ x 43½″ x ¾″	5530–554–8709
Cleat	4	Wood	1″ x 4″ x 39¾″	5510–220–6078
Cleat	4	Wood	1″ x 4″ x 34⅝″	5510–220–6078
Skid	3	Wood	4″ x 4″ x 43½″	5510–220–6226

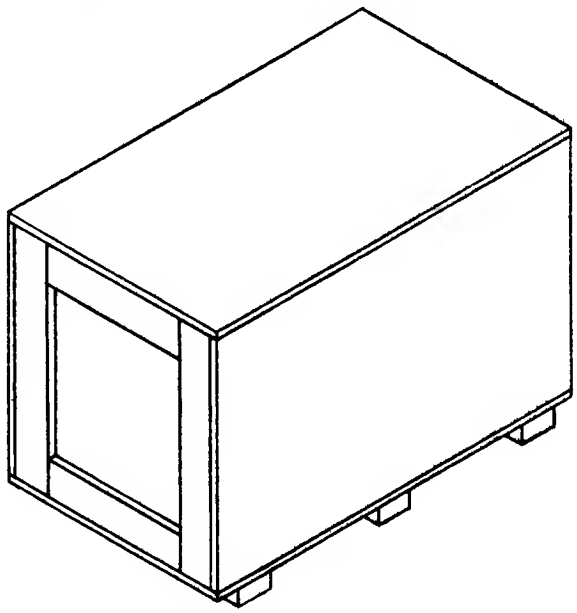

Figure A–40. Shipping Container.

APPENDIX A–41

PREPARATION INSTRUCTIONS FOR SHIPMENT: SURFACE VESSEL TRANSPORT

FSN	ITEM DESCRIPTION
☐ 1010–691–1382	Launcher, Grenade, 40MM, M79, W/E.

PRESERVED: _____ (Month) _____ (Day) _____ (Year)

PRESERVED FOR A MAXIMUM OF 180 DAYS

NOTE:

Function: Relates to instructions to be accomplished in preparation of the equipment for shipment.

Mech: For initials of mechanic or responsible processing personnel to indicate function has been completed.

Insp: For initials of inspector certifying that function has been completed as indicated by the mechanic or processing personnel.

Step	Function	Mech	Insp
	a. Unit Responsibility.		
1	Assure that weapon is in operating condition prior to movement to processing site.		
2	Certify that weapon and containers are free of ammunition.		
3	Deliver weapon, complete with tools and equipment to designated processing site.		
4	Unit Commander or representative will remain with weapons until acceptance by responsible preservation site personnel.		
	b. Cleaning, Preservation, Packaging, Packing and Marking.		
	WARNING Before cleaning and packaging, BE SURE WEAPON IS CLEAR. Do not actuate trigger until weapon has been cleared. Inspect chamber to insure that it is empty and check to see that no ammunition is in position to be introduced. Avoid having live ammunition in vicinity of work area.		
1	Disassemble weapon as necessary in preparation for thorough cleaning.		
2	Clean exterior surfaces of metal parts with rags, (DDD–R–30) (7920–205–3570) saturated with solvent cleaning compound (MIL–C–372) (6850–753–4806).		
3	Clean barrel bore, chamber and heavy contaminants of exterior surface with a non-metallic bristle brush (1010–474–5466) saturated with solvent cleaning compound (MIL–C–372) (6850–753–4806).		
4	Further cleaning of metal parts shall be accomplished by complete immersion in dry-cleaning solvent (P–D–680) (6850–285–8012), accompanied by scrubbing and agitation or with a solvent-saturated rag (DDD–R–30) (7920–205–3570).		
5	Rinse parts with clean dry-cleaning solvent (P–D–680) (6850–285–8012).		
6	Drain and dry clean parts with dry compressed air or with wiping rags (DDD–R–30) (7920–205–3570). The barrel bore and chamber shall be dried prior to preservative application.		
7	Cleaning of canvas, webbing, synthetic materials, and wood shall be by any process or combination of processes which will accomplish thorough cleaning without damage to the item(s) (brushing, wiping, etc.).		
8	Apply general purpose lubricating oil (VV–L–800) (9150–281–2007), to all metallic surfaces by any applicable procedure. Excess oil shall be drained prior to packaging.		

Step	Function	Mech	Insp
9	Wrap weapon with a piece of volatile paper (MIL–P–3420) (8135–985–7242), 18″ x 36″.		
10	Wrap sling, item 1 (Table A–41–2) with a piece of volatile paper (MIL–P–3420) (8135–985–7242), 8″ x 12″.		
11	Insert weapon and sling in barrier bag (MIL–B–131) (8135–282–0565), 12″ x 36″.		
12	Close bag by heat sealing.		
13	Wrap each bagged weapon with cushioning material (PPP–C–843) (8135–855–6969), 18″ x 36″ (3 pcs required).		
14	Secure cushioning material with pressure sensitive tape (PPP–T–60) (8135–890–9873), 2″ x 6″ (4 pcs required).		
15	Position four (4) bag-cushioned weapons in a corrugated fiberboard box (PPP–F–320) (8135–132–9067), 31½″ x 21½″ x 4½″.		
16	Cover weapons with cushioning material (PPP–C–843) (8135–855–6969), 22″ x 36″.		
17	Insert a piece of fiberboard (PPP–F–320) (8135–132–9067), 21″ x 31″ in container.		
18	Cover fiberboard with cushioning material (PPP–C–843) (8135–855–6969), 22″ x 36″.		
19	Clean, dry, preserve and package Basic Issue Items in accordance with Table A–41–2 and as specified herein.		
20	Wrap item 4 (Table A–41–2) with volatile paper (MIL–P–3420) (8135–985–7242), 6″ x 10″.		
21	Place items 2, 3, and 4 (Table A–41–2) in a barrier bag (MIL–B–131) (8135–282–0565), 8″ x 10″.		
22	Close bag by heat sealing.		
23	Insert four (4) sets of packaged Basic Issue Items in container with the weapons.		
24	Cover bagged items with cushioning material (PPP–C–843) (8135–855–6969), 22″ x 36″.		
25	Close box and seal with pressure sensitive tape, (PPP–T–60) (8135–890–9873) 2″ x 34″ (2 pcs required).		
26	The following marking shall be applied to each unit container with ink, marking, stencil, black (TT–I–559) (7510–161–0811): 1010–691–1382 Launcher, Grenade, 40 Millimeter, M79, W/E 4 Each Preserved on (month-day-year) for a maximum of 180 days Gross Weight: 38.60 Cube: 19.202		
27	Assemble shipping container (see Figure A–41) 50″ x 44″ x 32″ utilizing 8D nails (FF–N–105) (5315–010–6507).		
28	Pack twenty (20 Launcher) containers, unit packaged as above, in assembled shipping container.		
29	Close container with 8D nails (FF–N–105) (5315–010–6507).		
30	Apply steel strapping (QQ–S–781) (8135–283–0669) ¾″ x 168″ (3 pcs required).		
31	Secure strapping with seals (8135–239–5293) 3 required.		
32	The following marking shall be applied to each shipping container with minimum size 1″ letters using ink, marking, stencil, black (TT–I–559) (7510–161–0811): 1010–691–1382 Launcher, Grenade, 40 Millimeter, M79 W/E 80 Each Preserved on (month-day-year) for a maximum of 180 days Gross Weight: 958.00 Cube: 40.80		
33	Preparation instructions sheet shall be completed and placed in a waterproof envelope (MIL–B–131) (8135–282–0565), size 10″ x 12″ and secured to the item/container in a conspicuous location.		

Step	Funetion	Meeh	Insp
	c. Deprocessing. Prior to placing this item in service, following receipt, deprocessing action will be in reverse of check list above.		

Table A-41-1. Packaging Materials List

FSN	Item description	Unit of use qty
**1010-474-5466	Brush, Cleaning: Bore	1 ea.
**5315-010-6507	Nail, General Purpose (FF-N-105) 8D, 2⅜″ Lg., 50 Pound Carton	½ lb.
**5315-010-6511	Nail, General Purpose (FF-N-105) 16D, 3¼″ Lg., 50 Pound Carton	⅓ lb.
**5315-161-8607	Nail, General Purpose (FF-N-105) 6D, 1⅞″ Lg., 50 Pound Carton	¼ lb.
**5510-220-6078	Lumber, Soft Wood (MM-L-751) 1″ x 4″	8 bf.
**5510-220-6226	Lumber, Soft Wood (MM-L-751) 4″ x 4″	13 bf.
6850-285-8012	Solvent, Dry Cleaning (P-D-680) 55 Gallon Drum	1 pt.
6850-753-4806	Cleaning Compound Solvent (MIL-C-372) 55 Gallon Drum	1 pt.
7510-161-0811	Ink, Marking, Steneil, Blaek (TT-I-559) 1 Gallon Can	(***)
7920-205-3570	Rag, Wiping (DDD-R-30) 50 Pound Bale	(***)
*8135-132-9067	Fiberboard, Corrugated (PPP-F-320) 48″ x 96″ Sheet	24½ sf.
**8135-239-5293	Seal, Strapping, Closed Type W/O Ears ¾″, 1.7812 x 0.8075 Wide, 5,000 Per Box	3 ea.
8135-282-0565	Barrier Material, Water-Vaporproofed, Flexible (MIL-B-131) 36″ x 200 Yard Roll	1 yd.
**8135-282-0565	Barrier Material, Water-Vaporproofed, Flexible (MIL-B-131) 36″ x 200 Yard Roll	⅓ yd.
**8135-283-0669	Strapping, Steel, Nailless, (QQ-S-781) ¾″ x 0.023″ 100 Pound Coil	42 ft.
8135-855-6969	Cushioning Material, Cellulosie (PPP-C-843), ¾″x 24″ x 167 Feet Per Package	2¼ ft.
*8135-855-6969	Cushioning Material, Cellulosic (PPP-C-843), ¾″ x 24″ x 167 Feet Per Paekage	8¼ ft.
8135-890-9873	Pressure Sensitive Tape (PPP-T-60) 2″ x 60 Yard Roll	⅔ yd.
*8135-890-9873	Pressure Sensitive Tape (PPP-T-60) 2″ x 60 Yard Roll	2 yd.
8135-985-7242	Paper, Volatile, Packaging (MIL-P-3,420) 36″ x 100 Foot Roll	2 ft.
9150-281-2007	Corrosion, Preventative Compound, Lubrieating Oil, General Purpose (VV-L-800) 55 Gallon Drum.	1 pt.
9310-160-7858	Board, Steneil, UU-S-625 100 sh	(***)

*Material requirements for four 4 launchers.
**Material requirements for eighty 80 launchers.
***These items will be required in addition to the packaging materials listed above and will be used as needed.

Table A-41-2. Preservation for Basic Issue Items

Item No.	Item description	Qty. req'd	Cleaning	Drying	Preservative	Container	Container size	Container class	Mech	Insp
1	Sling, Small Arms: M1 Webbing	1	C-1							
2	Case, Lubricant Care, Small Arms	1	C-1							
3	Accessories	1	C-1							
4	Screwdriver and Wrench Combination	1	C-3	D-1						

EXPLANATION OF CODES

C-1 Any applicable method not injurious to the item. Normally accomplished by wiping with a dry rag (DDD-R-30) (7920-205-3570).

C-3 Wipe or scrub item with a rag (DDD-R-30) (7920-205-3570) saturated with dry-cleaning solvent (P-D-680) (6850-285-8012), or dip in solvent and brush clean.

D-1 Wipe clean rag (DDD-R-30) (7920-205-3570) to insure removal of solvent.

P-9 Apply a light coat of corrosion preventative compound, lubricating oil, general purpose (VV-L-800) (9150-281-2007) by dipping or brushing.

P-18 Wrap item with paper volatile corrosion inhibitor (MIL-P-3420) (8135-985-7242). Place dull side of material to the inside and foil side to outside.

P-19 Apply a light coat of corrosion preventive compound (MIL-C-16173) (8030-526-1604) by dipping or brushing. Allow to dry before handling.

NOTE

CONTAINERS:

E-Bag—Fabricated from (MIL-B-131) (8135-282-0565).
Box—Fabricated from (PPP-F-320) (8135-132-9067).
Bag closure—Heat seal.
Box closure—RSC Cartons: Seal the center seams of top and bottom with tape (PPP-T-60) (8135-890-9873).
OPF Cartons: Seal the top center seam with tape (PPP-T-60) (8135-890-9873).

Bill of Materials

Name	No. req'd	Material	Dimensions	FSN
Ends	2	Plywood	44" x 32" x ¾"	5530-554-8709
Sides	2	Plywood	53" x 32" x ¾"	5530-554-8709
Top	1	Plywood	53" x 45½" x ¾"	5530-554-8709
Bottom	1	Plywood	53" x 45½" x ¾"	5530-554-8709
Cleats	4	Wood	1" x 4" x 31¾"	5510-220-6078
Cleats	4	Wood	1" x 4" x 36⅝"	5510-220-6078
Skid	3	Wood	4" x 4" x 45½"	5510-220-6226

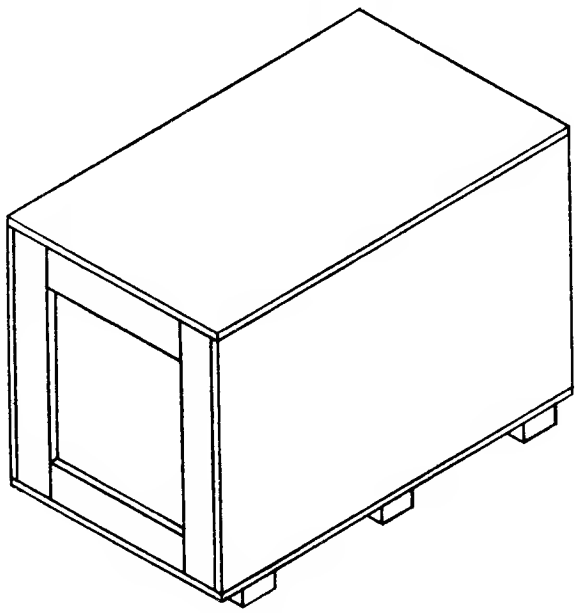

Figure A-41. Shipping Container.

APPENDIX A–42

PREPARATION INSTRUCTIONS FOR SHIPMENT: SURFACE VESSEL TRANSPORT

FSN	ITEM DESCRIPTION
☐ 1010–912–3014	Launcher, Grenade, 40MM, XM148.

PRESERVED: _____ (Month) _____ (Day) _____ (Year)

PRESERVED FOR A MAXIMUM OF 180 DAYS

NOTE:

Function: Relates to instructions to be accomplished in preparation of the equipment for shipment.

Mech: For initials of mechanic or responsible processing personnel to indicate function has been completed.

Insp: For initials of inspector certifying that function has been completed as indicated by the mechanic or processing personnel.

Step	Function	Mech	Insp
	a. Unit Responsibility.		
1	Assure that weapon, and equipment, are in operating condition prior to movement to processing site.		
2	Certify that weapon, magazines and containers are free of ammunition.		
3	Deliver weapon, complete with tools and equipment, to designated processing site.		
4	Unit Commander, or representative, will remain with weapons unit acceptance by responsible preservation site personnel.		
	b. Cleaning, Preservation, Packaging, Packing, and Marking.		
	WARNING		
	Before cleaning and packaging, BE SURE WEAPON IS CLEAR. Do not actuate trigger until weapon has been cleared. Inspect chamber to insure that it is empty and check to see that no ammunition is in position to be introduced. Avoid having live ammunition in vicinity of work area.		
1	Remove sight from launcher body and disassemble weapon, as necessary, prior to cleaning.		
2	Clean barrel bore, chamber and any parts, subjected to burned powder residues with a metallic brush (1010–474–5466) saturated with solvent cleaning compound (MIL–C–372) (6850–753–4806).		
3	Further cleaning of all metal parts shall be accomplished by complete immersion in solvent (P–D–680) (6850–285–8012), accompanied by scrubbing and agitation, or with solvent saturated rags (DDD–R–30) (7920–205–3570).		
4	Rinse parts with clean solvent (P–D–680) (6850–285–8012).		
5	Drain, and dry clean parts with dry compressed air, or with rags (DDD–R–30) (7920–205–3570).		
6	The barrel bore and chamber shall be dried with swabs (1005–288–3565).		
7	Cleaning of canvas, webbing, synthetic materials and wood, shall be by any process, or combination of processes, which will accomplish thorough cleaning without damage to the item(s). Clean by brushing, wiping, etc.		
8	Reassemble weapon. Do not remount sight assembly to weapon.		

Step	Function	Mech	Insp
9	Metallic surfaces of weapons shall be coated with corrosion preventative compound (VV–L–800) (9150–281–2007), applied by dipping.		
10	Drain excess oil from weapon, changing draining position, as necessary, to accomplish thorough drainage.		
11	Position trigger to carrying position.		
12	Wrap weapon with a piece of volatile paper (MIL–P–3420) (8135–985–7242) size 18″ x 24″.		
13	Cushion wrapped weapon with cushioning material (PPP–C–843) (8135–855–6969) size 24″ x 24″ (2 pieces).		
14	Secure cushioning material with tape (PPP–T–60) (8135–890–9873) 2″ x 24″.		
15	Cushion handguard with a piece of cushioning material (PPP–C–843) (8135–855–6969) size 12″ x 18″.		
16	Wrap a piece of volatile paper, (MIL–P–3420) (8135–985–7242) size 2″ x 24″ over sight assembly and insert sight into sight carrying case and close case.		
17	Clean, dry and preserve and package basic issue items in accordance with Table A–42–2 and as specified herein:		
18	Wrap items 1 thru 6 in a piece of volatile paper (MIL–P–3420) (8135–985–7242) size 9″ x 18″.		
19	Place four packaged launchers, including handguards and sights, together with four (4) sets of basic issue in a fiberboard unit container (PPP–F–320) (8135–132–9067) size 20″ x 16″ x 4″.		
20	Cushion packaged items with 2 pieces of cushioning material (PPP–C–843) (8135–855–6969) size 24″ x 24″.		
21	Seal all seams and joints of unit container with tape (PPP–T–60) (8135–890–9873) size 2″ x 128″.		
22	The following marking shall be applied to each unit container with ink, marking, stencil, black (TT–I–559) (7510–161–0811): 1010–912–3014 Launcher, Grenade, 40MM, XM148 4 each Preserved on (month-day-year) for a maximum of 180 days Gross Weight: 20.00 Cube: .867		
23	Assemble a shipping container 33¼″ x 27½″ x 20¾″ (Fig. A–42) with 8D nails (FF–N–105) (5315–010–6507), 10D nails (FF–N–105) (5315–101–6509) and 6D nails (FF–N–105) (5315–161–8607).		
24	Place twelve (12) unit containers in shipping container.		
25	Secure lid with 8D nails (FF–N–105) (5315–010–6507).		
26	Apply steel strapping (QQ–S–781) (8135–283–0669) ¾″ x 112″ (2 pieces required).		
27	Secure strapping with seals (8135–239–5293) (2 req'd).		
28	The following marking shall be applied to each shipping container with minimum size 1″ letters, using ink, marking, stencil, black (TT–I–559) (7510–161–0811): 1010–912–3014 Launcher, Grenade, 40MM, XM148 48 Each Preserved on (month-day-year) for a maximum of 180 days Gross Weight: 330.00 Cube: 15.00		
29	Preparation instructions sheets shall be completed and placed in a waterproof envelope (MIL–B–131) (8135–282–0565), size 10″ x 12″ and secured to the item/container in a conspicuous location.		
	c. Deprocessing. Prior to placing the item in service, following receipt, deprocessing action in reverse of checklist must be completed.		

Table A-42-1. Packaging Materials List

FSN	Item description	Unit of use qty
1005-288-3565	Swab, Small Arms Cleaning, 2½" x 2½", 1,000 Per Package	3 ea.
*1010-474-5466	Brush, Bore	1 ea.
*5315-010-6507	Nail, General Purpose (FF-N-105), 8D, 2⅜" long, 50 Pounds Per Carton	⅓ lb.
*5315-010-6509	Nail, General Purpose (FF-N-105), 10D, 2⅞" long, 50 Pounds Per Carton	1/10 lb.
*5315-161-8607	Nail, General Purpose (FF-N-105), 6D, 1⅞" long, 50 Pounds Per Carton	¼ lb.
*5510-220-6078	Lumber, Soft Wood (MM-L-751), 1" x 4"	4½ bf.
*5510-220-6214	Lumber, Soft Wood (MM-L-751), 3" x 4"	5 bf.
*5530-554-8709	Plywood, Soft Wood (NN-P-530), ¾" x 48" x 96" Sheet	30 sf.
6850-285-8012	Solvent, Dry Cleaning (P-D-680), 55 Gallon Drum	1 pt.
6850-753-4806	Cleaning Compound Solvent (MIL-C-372), 55 Gallon Drum	1 pt.
7510-161-0811	Ink, Marking, Stencil, Black (TT-I-559), 1 Gallon Can	(***)
7920-205-3570	Rag, Wiping (DDD-R-30), 50 Pound Bale	(***)
**8135-132-9067	Fiberboard, Corrugated (PPP-F-320), 48" x 96" Sheet	10½ sf.
*8135-239-5293	Seal, Strapping, Closed Type W/O Ears, ¾", 1.7812 x 0.8075 Wide, 5,000 Per Box	2 ea.
*8135-282-0565	Barrier Material, Water-Vaporproofed, Flexible (MIL-B-131), 36" x 200 Yard Roll	⅓ yd.
*8135-283-0669	Strapping, Steel, Nailless (QQ-S-781), ¾" x 0.023", 100 Pound Coil	18¾ ft.
8135-855-6969	Cushioning Material, Cellulosic (PPP-C-843), ¾" x 24" x 167 Foot Package	4¾ ft.
**8135-855-6969	Cushioning Material, Cellulosic (PPP-C-843), ¾" x 24" x 167 Foot Package	4 ft.
8135-890-9873	Tape, Pressure Sensitive (PPP-T-60), 2" x 60 Yard Roll	⅔ yd.
**8135-890-9873	Pressure Sensitive Tape (PPP-T-60), 2" x 60 Yard Roll	3½ yd.
8135-985-7242	Paper, Volatile, Packaging (MIL-P-3420), 36" x 100 Foot Roll	1⅓ ft.
9150-281-2007	Corrosion, Preventative Compound, Lubricating Oil, General Purpose (VV-L-800), 55 Gallon Drum.	1 pt.
9310-160-7858	Board, Stencil, UU-S-625, 100 sh	(***)

*Material requirements for 48 weapons.
**Material requirements for 4 weapons.
***These items will be required in addition to the packaging materials listed above and will be used as needed.

Table A-42-2. Preservation for Basic Issue Items.

Step	Item description	Qty	Cleaning	Drying	Preservative	Container & class	Container size	Remarks	Mech	Insp
1	Wrench Assembly	1	C-3	D-1						
2	Wrench, Open End	1	C-3	D-1						
3	Tool, Combination	1	C-3	D-1						
4	Thong	1	C-1	(**)						
5	Brush, Cleaning, Bore	1	C-1	(**)						
6	Brush, Cleaning	1	C-1	(**)						

EXPLANATION OF CODES

C-1 Any applicable method not injurious to the item. Normally accomplished by wiping with a dry rag (DDD-R-30) (7920-205-3570).

C-3 Wipe or scrub item with a rag (DDD-R-30) (7920-205-3570) saturated with dry-cleaning solvent (P-D-680) (6850-285-8012), or dip in solvent and brush clean.

D-1 Wipe with clean rag (DDD-R-30) (7920-205-3570) to insure removal of solvent.
Note. Dry by using dry compressed air.

P-9 Apply a light coat of corrosion preventative compound, lubricating oil, general purpose (VV-L-800) (9150-281-2007) by dipping or brushing.

P-18 Wrap item with paper volatile corrosion inhibitor (MIL-P-3420) (8135-985-7242). Place dull side of material to the inside and foil side to outside.

P-19 Apply a light coat of corrosion preventative compound (MIL-C-16173) (8030-526-1604) by dipping or brushing. Allow to dry before handling.

NOTE

CONTAINERS:
E-Bag—Fabricated from (MIL-B-131) (8135-282-0565).
Box—Fabricated from (PPP-F-320) (8135-132-9067).
Bag closure—Heat seal.
Box closure—RSC Cartons: Seal the center seams of top and bottom with tape (PPP-T-60) (8135-890-9873). OPF Cartons: Seal the top center seam with tape (PPP-T-60) (8135-890-9873).

Bill of Materials

Name	No. req'd	Material	Dimensions	FSN
Ends	2	Plywood	27¼'' x 20¾'' x ¾''	5530–554–8709
Sides	2	Plywood	36¼'' x 20¾'' x ¾''	5530–554–8709
Top	1	Plywood	36¼'' x 28¾'' x ¾''	5530–554–8709
Bottom	1	Plywood	36¼'' x 28¾'' x ¾''	5530–554–8709
Vertical Cleat	4	Wood	3'' x 4'' x 28¾''	5510–220–6078
Horizontal Cleat	4	Wood	1'' x 4'' x 20''	5510–220–6078
Skids	2	Wood	1'' x 4'' x 20⅝''	5510–220–6214

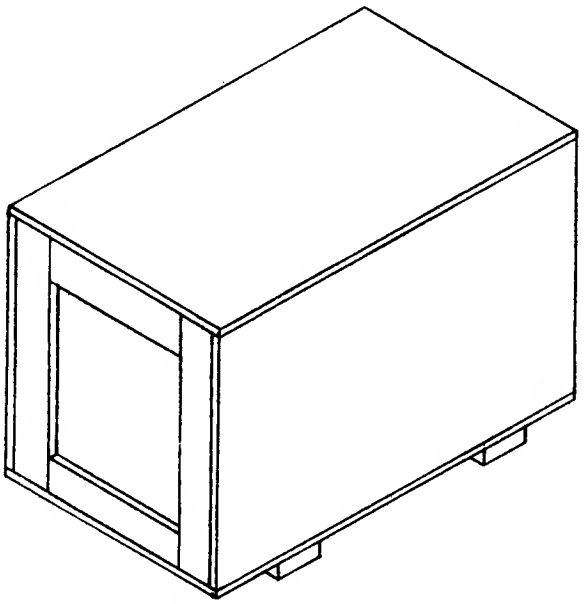

Figure A–42. Shipping container.

APPENDIX A–43

PREPARATION INSTRUCTIONS FOR SHIPMENT: SURFACE VESSEL TRANSPORT

	FSN	ITEM DESCRIPTION
☐	1055–575–0064	Launcher, Rocket 3.5 (M20) W/E
☐	1055–591–0217	Launcher, Rocket 3.5 (M20B1) W/E
☐	1055–840–1841	Launcher, Rocket 3.5 (M20A1) W/E
☐	1055–840–1842	Launcher, Rocket 3.5 (M20A1B1) W/E

PRESERVED: _____ _____ _____
(Month) (Day) (Year)

PRESERVED FOR A MAXIMUM OF 180 DAYS

NOTE:

Function: Relates to instructions to be accomplished in preparation of the equipment for shipment.

Mech: For initials of mechanic or responsible processing personnel to indicate function has been completed.

Insp: For initials of inspector certifying that function has been completed as indicated by the mechanic or processing personnel.

Step	Function	Mech	Insp
	a. Unit Responsibility.		
1	Assure that weapon and equipment are in good operating condition.		
2	Certify that weapon is free of ammunition.		
3	Deliver complete weapon to designated processing area.		
4	Unit commander or representative will remain with equipment until acceptance by responsible preservation site personnel.		
	b. Cleaning, Preservation, Packaging, Packing, and Marking.		
	WARNING		
	Before cleaning and packaging, BE SURE WEAPON IS CLEAR. Do not actuate trigger until weapon has been cleared. Inspect chamber to insure that it is empty and check to see that no ammunition is in position to be introduced. Avoid having live ammunition in vicinity of work area.		
1	Disassemble front barrel from the rear barrel assembly.		
2	Clean all *metallic* surfaces by wiping with rag (DDD–R–30) (7920–205–3570).		
3	Clean barrel bores by wiping (DDD–R–30) (7920–205–3570).		
4	All ferrous metal surfaces shall be cleaned with a dry cleaning solvent (P–D–680) (6850–285–8012).		
	CAUTION		
	Care shall be exercised to protect mechanism electrical firing assembly and sight reflecting assembly from any solvent or oil.		
5	Dry with compressed air or wiping rag (DDD–R–30) (7920–205–3570) as necessary to accomplish thorough drying.		
6	All cleaned surfaces shall be thoroughly dried prior to preservation.		
7	Preserve unpainted surfaces only (VV–L–800) (9150–281–2007).		
8	The sight assembly shall be individually wrapped with barrier material (MIL–B–121) (8135–226–3124) Size 9″ x 9″ with rubber eyepiece adjacent to the launcher barrel.		
9	Care shall be exercised when applying barrier material to prevent eyepiece from becoming distorted.		

Step	Function	Mech	Insp
10	Secure barrier material (MIL–B–121) (8135–226–3124) with (PPP–T–60) tape (8135–890–9873) Size 1″ x 16″.		
11	Wrap the firing mechanism only with (MIL–B–121) (8135–226–3124) Size 5″ x 12″.		
12	Secure wrapped firing mechanism with (PPP–T–60) tape (8135–890–9873) Size 2″ x 12″.		
13	Fabricate a fiberboard box size 33″ x 13″ x 7″ (PPP–F–320) (8135–132–9067).		
14	Cushioning material 2 pieces 13″ x 7″ (4 required) (MIL–C–7769) (8135–132–9568) shall be located in each end of container.		
15	Cushioning material 2 pieces 13″ x 29″ (MIL–C–7769) (8135–132–9568) shall be located in bottom of fiberboard container.		
16	Basic Issue Items shall be preserved and packaged as specified in Table A–43–2.		
17	Locate items 1 through 4, see Table A–43–2 into a bag (MIL–B–131) (8135–282–0565) 10″ x 12″.		
18	Heat seal bag.		
19	Secure bag to barrel rear, shoulder piece with (PPP–T–60) (8135–890–9873) tape 2″ x 15″ (2 pieces required).		
20	Locate barrel rear with BII equipment in cushioned container (PPP–F–320) (8135–132–9067).		
21	Separator of cellulosic material, 13″ x 29″ (PPP–C–843) (8135–855–6969) shall be located over barrel rear and BII equipment.		
22	Locate barrel front on top of cushioning material (PPP–C–843) (8135–855–6969).		
23	Cushioning material, 2 pieces, 13″ x 29″ (MIL–C–7769) (8135–132–9568) shall be put on top of boxed rocket launcher.		
24	Close container with pressure sensitive tape (PPP–T–60) (8135–890–9873) 2″ x 36″ (2 pieces required).		
25	Apply the following information on each fiberboard container with stencil ink, (TT–I–559) (7510–161–0811): Federal Stock Number Item description 1 Each Preserved on (month-day-year) for a maximum of 180 days Gross Weight 18.00 Cube 1.960		
26	Assemble a shipping container 54½″ x 33¾″ x 37¾″ (see Figure A–43) with 8D nails (FF–N–105) (5315–010–6507) 6D nails (FF–N–105) (5315–161–8607) and apply skids with 10D nails (FF–N–105) (5315–010–6509).		
27	Pack twenty (20) launcher rockets in assembled shipping container.		
28	Close container with 8D nails (FF–N–105) (5315–010–6507).		
29	Apply three (3) straps girthwise around shipping container (QQ–S–781) (8135–283–0669) ¾″ x 159″.		
30	Secure strapping with three (3) seals (8135–239–5293).		
31	Apply the following marking in 1″ letters on cleated plywood box with stencil ink (TT–I–559) (7510–161–0811): Federal Stock Number Item description 20 Each Preserved on (month-day-year) for a maximum of 180 days Gross Weight 450 lbs Cube 45		
32	Preparation instructions sheet shall be completed and placed in a waterproof envelope (MIL–B–131) (8135–282–0565) 10″ x 12″ and secured to the item/container in a conspicuous location.		
	c. Deprocessing. Prior to placing this item in service, following receipt, deprocessing action will be in reverse of check list above.		

Table A-43-1. Packaging Materials List

FSN	Item description	Unit of use qty
*5315-010-6507	Nail, General Purpose (FF-N-105), 8D, 2⅜'' Lg., 50 Pounds Per Carton	1 lb.
*5315-010-6509	Nail, General Purpose (FF-N-105), 10D 2⅞'' Lg., 50 Pounds Per Carton	½ lb.
*5315-161-8607	Nail, General Purpose (FF-N-105), 6D 1⅞'' Lg., 50 Pounds Per Carton	½ lb.
*5510-220-6078	Lumber, Soft Wood (MM-L-751) 1'' x 4''	8 bf.
*5510-220-6214	Lumber, Soft Wood (MM-L-751) 3'' x 4''	10 bf.
*5530-554-8709	Plywood, Soft Wood (NN-P-530), ¾'' x 48'' x 96'' Sheet	76 sf.
6850-285-8012	Solvent, Dry Cleaning (P-D-680) 55-Gallon Drum	1 oz.
7510-161-0811	Ink, Marking, Stencil, Black (TT-I-559) 1 Gallon Can	(**)
7920-205-3570	Rag, Wiping (DDD-R-30), 50-Pound Bale	(**)
8135-132-9067	Fiberboard, Corrugated, (PPP-F-320) 48'' x 96'' Sheet	13½ sf.
8135-132-9568	Cushioning, Bound Fiber (MIL-C-7769) 24'' x 72'' Sheet	6½ ft.
8135-226-3124	Barrier Material, Greaseproof, Waterproof Flexible (MIL-B-121) 36'' x 200-Yard Roll	1/10 yd.
*8135-239-5293	Seal, Strapping, Closed Type W/O Ears, ¾'', 1.7812 x 0.8075 Wide, 5,000 Per Box	3 ea.
8135-282-0565	Barrier Material, Water-Vaporproofed, Flexible (MIL-B-131) 36'' x 200-Yard Roll	⅓ yd.
*8135-282-0565	Barrier Material, Water-Vaporproofed, Flexible (MIL-B-131) 36'' x 200-Yard Roll	⅓ yd.
*8135-283-0669	Strapping, Steel, Nailless (QQ-S-781) ¾'' x 0.023'', 100-Pound Coil	40 ft.
8135-855-6969	Cushioning Material, Cellulosic (PPP-C-843) ¾'' x 24'' x 167-Foot Package	1¼ ft.
8135-890-9873	Pressure Sensitive Tape (PPP-T-60) 2'' x 60-Yard Roll	3⅔ yds.
9150-281-2007	Corrosion, Preventative Compound, Lubricating Oil, General Purpose (VV-L-800) 55-Gallon Drum.	⅛ oz.

*Material requirements for 20 rocket launchers.
**These items will be required in addition to the packaging materials listed above and will be used as needed.

Table A-43-2. Preservation for Basic Issue Items

Item No.	Item Description	Qty	Cleaning	Drying	Preservative	Container size	Container class	Remarks	Mech	Insp
1	Sling, Small Arms	1	C-1		None	Bag, 4 x 6	E			
2	Wrench, Combination	1	C-1		P-9	Bag, 4 x 6	E			
3	Tech Manual—TM 9	1	C-1		None.					
4	Tech Manual	1	C-1		None	Bag.				

EXPLANATION OF CODES

C-1 Any applicable method not injurious to the item. Normally accomplished by wiping with a dry rag (DDD-R-30) (7920-205-3570).

C-3 Wipe or scrub item with a rag (DDD-R-30) (7920-205-3570) saturated with dry-cleaning solvent (P-D-680) (6850-285-8012), or dip in solvent and brush clean.

D-1 Wipe with clean rag (DDD-R-30) (7920-205-3570) to insure removal of solvent.

P-9 Apply a light coat of corrosion preventative compound, lubricating oil, general purpose (VV-L-800) (9150-281-2007) by dipping or brushing.

P-18 Wrap item with paper volatile corrosion inhibitor (MIL-P-3420) (8135-985-7242). Place dull side of material to the inside and foil side to outside.

P-19 Apply a light coat of corrosion preventive compound (MIL-C-16173) (8030-526-1604) by dipping or brushing. Allow to dry before handling.

NOTE

CONTAINERS:

E-Bag—Fabricated from (MIL-B-131) (8135-282-0565).
Box—Fabricated from (PPP-F-320) (8135-132-9067).
Bag Closure—Heat seal.
Box Closure—RSC Cartons: Seal the center seams of top and bottom with tape (PPP-T-60) (8135-890-9873). OPF Cartons: Seal the top center seam with tape (PPP-T-60) (8135-890-9873).

Bill of Materials

Name	No. req'd	Material	Dimensions	FSN
Ends	2	Plywood	33¾'' x 37¾'' x ¾''	5530-554-8709
Cleats	4	Wood	1'' x 4'' x 37½''	5510-220-6078
Cleats	4	Wood	1'' x 4'' x 26½''	5510-220-6078
Sides	2	Plywood	57½'' x 37¾'' x ¾''	5530-554-8709
Top	1	Plywood	57½'' x 35¼'' x ¾''	5530-554-8709
Bottom	1	Plywood	57½'' x 35¼'' x ¾''	5530-554-8709
Skids	3	Wood	3'' x 4'' x 35¼''	5510-220-6214

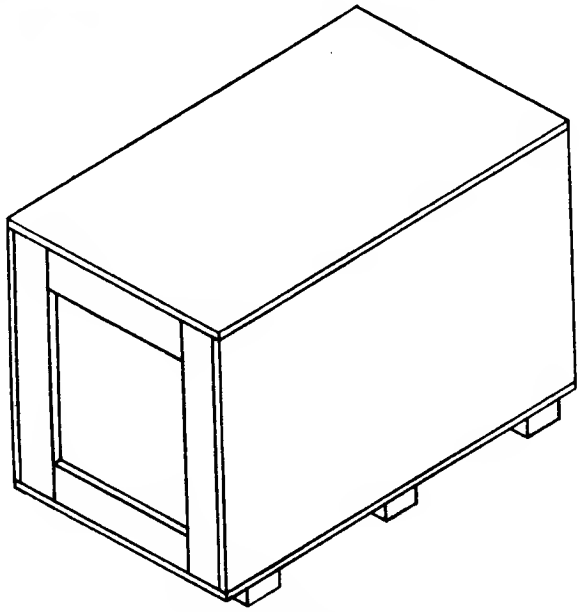

Figure A-43. Shipping container

APPENDIX A-44

PREPARATION INSTRUCTIONS FOR SHIPMENT: SURFACE VESSEL TRANSPORT

FSN	ITEM DESCRIPTION
☐ 1095-726-5657	Pistol, Pyrotechnic AN-M8, W/Mount.

PRESERVED: _____ (Month) _____ (Day) _____ (Year)

PRESERVED FOR A MAXIMUM OF 180 DAYS

NOTE:

Function: Relates to instructions to be accomplished in preparation of the equipment for shipment.

Mech: For initials of mechanic or responsible processing personnel to indicate function has been completed.

Insp: For initials of inspector certifying that function has been completed as indicated by the mechanic or processing personnel.

Step	Function	Mech	Insp
	a. Unit Responsibility.		
1	Assure that weapon is in good operating condition.		
2	Certify that weapon and containers are free of ammunition and explosives.		
3	As directed, weapon complete with tools and equipment will be delivered to designated processing site.		
4	Unit Commander, or representative, will remain with equipment until acceptance by responsible preservation site personnel.		
	b. Cleaning, Preservation, Packaging, Packing, and Marking.		
	WARNING		
	Before cleaning and packaging, BE SURE WEAPON IS CLEAR. Do not actuate trigger until weapon has been cleared. Inspect chamber to insure that it is empty and check to see that no ammunition is in position to be introduced. Avoid having live ammunition in vicinity of work area.		
1	Remove pistol from mount.		
2	Disassemble weapon as necessary to accomplish thorough cleaning.		
3	Clean barrel bore, chamber, and other parts of heavy contaminates by wiping with a rag (DDD-R-30) (7920-205-3570), saturated with solvent, cleaning compound (MIL-C-372) (6850-753-4806).		
4	Remove cleaner from bore using swab, small arms cleaning, size 2½″ x 2½″ (1005-288-3565).		
5	Further cleaning of all surfaces shall be accomplished by complete immersion, or, by wiping with rag (DDD-R-30) (7920-205-3570), saturated with solvent, dry cleaning (P-D-680) (6850-285-8012), accompanied by scrubbing and agitation.		
6	Position parts to allow complete drainage.		
7	Rinse parts in clean solvent, dry cleaning (P-D-680) (6850-285-8012), to remove residues.		
8	Drain and dry with compressed air, or wipe with a rag (DDD-R-30) (7920-205-3570).		

Step	Function	Mech	Insp
9	Cleaning of canvas, webbing, synthetic materials, and wood, shall be by any process or combination of processes which will accomplish thorough cleaning without damage to the item(s). Clean by brushing, wiping, etc.		
10	Reassemble weapon.		
11	Metallic surfaces of weapons shall be coated with corrosion preventative compound, lubricating oil, general purpose (VV-L-800) (9150-281-2007), applied by dipping.		
12	Drain excess oil from weapon changing draining position as necessary to accomplish thorough drainage.		
13	Wrap pistol with a 12″ x 18″ piece of paper, volatile, packaging (MIL-P-3420) (8135-985-7242).		
14	Clean all surfaces of mount by complete immersion, or by wiping with rag (DDD-R-30) (7920-205-3570), saturated with solvent, dry cleaning (P-D-680) (6850-285-8012), accomplished by scrubbing and agitation.		
15	Drain excess solvent from mount.		
16	Rinse mount in clean solvent, dry cleaning (P-D-680) (6850-285-8012), to remove residues.		
17	Drain, and dry with compressed air, or, wipe with rags (DDD-R-30) (7920-205-3570).		
18	The mount shall be coated with corrosion preventative compound, lubricating oil general purpose (VV-L-800) (9150-281-2007), applied by dipping.		
19	Drain excess oil from mount.		
20	Wrap mount with a 6″ x 12″ piece of paper, volatile, packaging (MIL-P-3420) (8135-985-7242).		
21	Insert wrapped pistol and mount into a 12″ x 12″ bag (MIL-B-131) (8135-282-0565).		
22	Close bag by heat sealing.		
23	Place sealed bag in a corrugated fiberboard box (PPP-F-320) (8135-132-9067), size 10″ x 9½″ x 3¾″.		
24	Fill void space of box with cushioning material, cellulosic (PPP-C-843) (8135-855-6969), size 12″ x 12″ x ¾″.		
25	Seal center seams of top and bottom with tape, pressure sensitive (PPP-T-60) (8135-890-9873), size 2″ x 14″ (2 pieces)		
26	Apply the following marking on each unit container with ink, marking, stencil, black (TT-I-559) (7510-161-0811): 1095-726-5657 Pistol, Pyrotechnic, AN-M8, W/mount 1 each Preserved on (month-day-year) for a maximum of 180 days Gross Weight: 4.62 Cube: 0.256		
27	Assemble cleated plywood shipping container, size 31¾″ x 30¼″ x 25¾″, in accordance with figure A-44, using 8D nails (FF-N-105) (5315-010-6507), 10D nails (FF-N-105) (5315-010-6509), and 6D nails (FF-N-105) (5315-161-8607).		
28	Place 54 pistols, with mount, unit packaged as above in a shipping container figure A-44.		
29	Close shipping container with 8D nails (FF-N-105) (5315-010-6507).		
30	Secure shipping container with steel strapping (QQ-S-781) (8135-283-0669), size ¾″ x 128″ long, 3 pieces required.		
31	Secure steel strapping with 3 seals, ¾″ (8135-239-5293).		

Step	Function	Mech	Insp
32	Apply the following marking on each shipping container with 1″ minimum size letters using ink, marking, stencil, black (TT-I-559) (7510-161-0811): 1095-726-5657 Pistol, Pyrotechnic, AN-M8, W/mount 54 each Preserved on (month-day-year) for a maximum of 180 days Gross Weight 373.00 Cube 19.07		
33	Preparation instructions sheets shall be completed and placed in a waterproof envelope (MIL-B-131) (8135-282-0565), size 10″ x 12″ and secured to the item/container in a conspicuous location.		
	c. Deprocessing. Prior to placing this item in service, following receipt, deprocessing action will be in reverse of checklist above.		

Table A-44. Packaging Materials List

FSN	Item description	Unit of use qty
1005-288-3565	Swab, Small Arms Cleaning, 2½″ x 2½″, 1,000 per Package	1 ea.
*5315-010-6507	Nail, General Purpose (FF-N-105), 8D, 2⅜″ LG, 50 Pound Carton	⅓ lb.
*5315-010-6509	Nail, General Purpose (FF-N 105), 10D, 2⅞″ LG, 50 Pound Carton	⅛ lb.
*5315-161-8607	Nail, General Purpose (FF-N-105), 6D, 1⅞″ LG, 50 Pound Carton	½ lb.
*5510-220-6078	Lumber, Soft Wood (MM-L-751), 1″ x 4″	5 bf.
*5510-220-6214	Lumber, Soft Wood (MM-L-751), 3″ x 4″	5¼ bf.
*5530-554-8709	Plywood, Soft Wood, ¾″ (NN-P-530), ¾″ x 48″ x 96″ Sheet	39 sf.
6850-285-8012	Solvent, Dry Cleaning (P-D-680), 55 Gallon Drum	1 pt.
6850-753-4806	Cleaning Compound Solvent (MIL-C-372), 55 Gallon Drum	1 pt.
7510-161-0811	Ink, Marking, Stencil, Black (TT-I-559), 1 Gallon Can	(**)
7920-205 3570	Rag, Wiping (DDD-R-30), 50 Pound Bale	(**)
8135-132-9067	Fiberboard, Corrugated (PPP-F-320), 48″ x 96″ Sheet	4⅛ sf.
*8135-239-5293	Seal, Strapping, Closed Type W/O Ears, ¾″, 1.7812 x 0.8075 Wide, 5,000 Per Box	3 ea.
8135-282-0565	Barrier Material, Water-Vaporproofed, Flexible (MIL-B-131), 36″ x 200 Yard Roll	¼ yd.
*8135-282-0565	Barrier Material water-vaporproofed, Flexible (MIL-B-131), 36″ x 200 Yard Roll	⅜ yd.
*8135-283-0669	Strapping, Steel, Nailless (QQ-S-781), ¾″ x 0.023″, 100 Pound Coil	31 ft.
8135-855-6969	Cushioning Material, Cellulosic (PPP-C-843), ¾″ x 24″ x 167 Foot Per Package	½ ft.
8135-890-9873	Pressure Sensitive Tape (PPP-T-60), 2″ x 60 Yard Roll	⅓ ft.
8135-985-7242	Paper, Volatile, Packaging (MIL-P-3420), 36″ x 100 Foot Roll	1½ ft.
9150-281-2007	Corrosion, Preventative Compound, Lubricating Oil, General Purpose (VV-L-800), 55 Gallon Drum.	1 pt.
9310-160-7858	Board, Stencil, UU-S-625, 100 sh	(**)

*Material requirements for 54 pistols w/mount.
**These items will be required in addition to the packaging materials listed above and will be used as needed.

Bill of Materials

Name	Qty req'd	Material	Dimensions	FSN
End	2	Plywood	30¼′ x 25¾″ x ¾″	5530-554-8709
Side	2	Plywood	34¾″ x 25¾″ x ¾″	5530-554-8709
Top	1	Plywood	34¾″ x 31¾″ x ¾″	5530-554-8709
Bottom	1	Plywood	34¾″ x 31¾″ x ¾″	5530-554-8709
Vertical Cleat	4	Wood	1″ x 4″ x 25⅝″	5510-220-6078
Horizontal Cleat	4	Wood	1″ x 4″ x 18⅜″	5510-220-6078
Skid	2	Wood	3″ x 4″ 31¾″	5510-220-6214

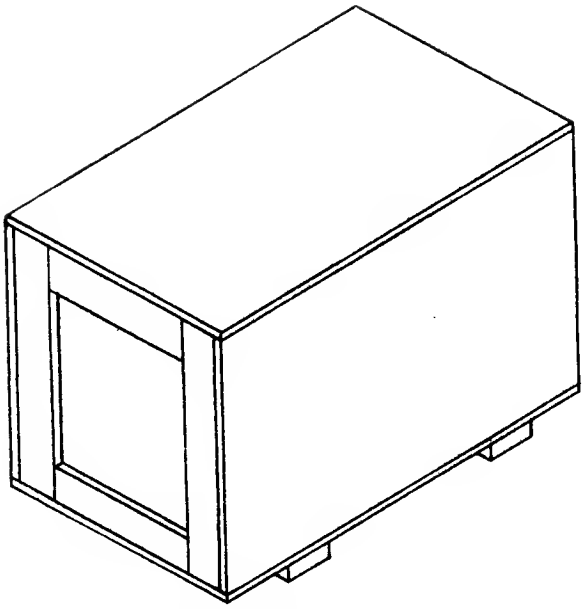

Figure A-44. Shipping container

APPENDIX A–45

PREPARATION INSTRUCTIONS FOR SHIPMENT: SURFACE VESSEL TRANSPORT

FSN	ITEM DESCRIPTION
☐ 1095–726–5820	Pistol, Pyrotechnic, AN–M8.

PRESERVED: _____ (Month) _____ (Day) _____ (Year)

PRESERVED FOR A MAXIMUM OF 180 DAYS

NOTE:

Function: Relates to instructions to be accomplished in preparation of the equipment for shipment.

Mech: For initials of mechanic or responsible processing personnel to indicate function has been completed.

Insp: For initials of inspector certifying that function has been completed as indicated by the mechanic or processing personnel.

Step	Function	Mech	Insp
	a. Unit Responsibility		
1	Assure that weapon is in good operating condition.		
2	Certify that weapon and containers are free of ammunition and explosives.		
3	As directed, weapon complete with tools and equipment will be delivered to designated processing site.		
4	Unit Commander, or representative, will remain with equipment until acceptance by responsible preservation site personnel.		
	b. Cleaning, Preservation, Packaging, Packing and Marking		
	WARNING		
	Before cleaning and packaging, BE SURE WEAPON IS CLEAR. Do not actuate trigger until weapon has been cleared. Inspect chamber to insure that it is empty and check to see that no ammunition is in position to be introduced. Avoid having live ammunition in vicinity of work area.		
1	Disassemble weapon, as necessary, to accomplish thorough cleaning.		
2	Clean barrel bore, chamber, and other parts, of heavy contaminants, by wiping with rag, wiping (DDD–R–30) (7920–205–3570), saturated with solvent, cleaning compound (MIL–C–372) (6850–753–4806).		
3	Remove cleaner from bore using swab, small arms cleaning, size 2½″ x 2½″ (1005–288–3565).		
4	Further cleaning of all surfaces shall be accomplished by complete immersion, or, by wiping with rags (DDD–R–30) (7920–205–3570) saturated with solvent, dry cleaning (P–D–680) (6850–285–8012), accompanied by scrubbing and agitation.		
5	Position parts to allow complete drainage.		
6	Rinse parts in clean solvent, dry cleaning (P–D–680) (6850–285–8012), to remove residues.		
7	Drain and dry with compressed air, or, wipe with rag wiping (DDD–R–30) (7920–205–3570).		
8	Cleaning of canvas, webbing, synthetic materials, and wood, shall be by any process, or combination of processes which will accomplish thorough cleaning without damage to the item(s). Clean by brushing, wiping, etc.		
9	Reassemble weapon.		

Step	Function	Mech	Insp
10	Metallic surfaces of weapons shall be coated with corrosion preventative compound, lubricating oil, general purpose (VV-L-800) (9150-281-2007), applied by dipping.		
11	Drain excess oil from weapon, changing draining position as necessary to accomplish thorough drainage.		
12	Wrap pistol with a 12″ x 18″ piece of paper, volatile, packaging (MIL-P-3420) (8135-985-7242).		
13	Place each wrapped pistol in a 12″ x 12″ bag (MIL-B-131) (8135-282-0565).		
14	Close bag by heat sealing.		
15	Place sealed bag in a corrugated fiberboard box (PPP-F-320) (8135-132-9067), size 10″ x 9½″ x 3¾″.		
16	Fill void space of box with cushioning material, cellulosic (PPP-C-843) (8135-855-6969), size 12″ x 12″ x ¾″.		
17	Seal all seams and joints of box with tape, pressure sensitive (PPP-T-60) (8135-890-9873), 2″ x 80″.		
18	Apply the following markings on each unit container with ink, marking, stencil, black (TT-I-559) (7510-161-0811): 1095-726-5820 Pistol, Pyrotechnic, AN-M8 1 Each Preserved on (month-day-year) for a maximum of 180 days Gross Weight: 3.38 Cube: 0.256		
19	Assemble a cleated plywood shipping container, 31¾″ x 30¼″ x 25¾″, in accordance with Figure A-45, using 8D nails (FF-N-105) (5315-010-6507), 10D nails (FF-N-105) (5315-010-6509), and 6D nails (FF-N-105) (5315-161-8607).		
20	Place 54 pistols, unit packaged as above, in a shipping container (Figure A-45).		
21	Close shipping container with 8D nails (FF-N-105) (5315-010-6507).		
22	Secure shipping container with steel strapping (QQ-S-781) (8135-283-0669), ¾″ x 128″ long (3 pieces required).		
23	Secure steel strapping with 3 seals, ¾″ (8135-239-5293).		
24	Apply the following markings on each shipping container with 1″ minimum size letters using ink, marking, stencil, black (TT-I-559) (7510-161-0811): 1095-726-5820 Pistol, Pyrotechnic, AN-M8 54 Each Preserved on (month-day-year) for a maximum of 180 days Gross Weight: 293.00 Cube: 19.07		
25	Preparation instructions sheets shall be completed and placed in a waterproof envelope (MIL-B-131) (8135-282-0565), size 10″ x 12″ and secured to the item/container in a conspicuous location.		
	c. Deprocessing. Prior to placing this item in service, following receipt, deprocessing action will be in reverse of check list above.		

Table A-45. Packaging Materials List

FSN	Item description	Unit of use qty
1005-288-3565	Swab, Small Arms, Cleaning, 2½″ x 2½″, 1,000 per Package	1 ea.
*5315-010-6507	Nail, General Purpose (FF-N-105) 8D, 2⅜″ Lg., 50 Pounds per Carton	⅓ lb.
*5315-010-6509	Nail, General Purpose (FF-N-105), 10D, 2⅞″ Lg., 50 Pounds per Carton	⅛ lb.
*5315-161-8607	Nail, General Purpose (FF-N-105) 6D, 1⅞″ Lg., 50 Pounds per Carton	½ lb.

See footnotes at end of table.

Table A–45. Packaging Materials List—Continued

FSN	Item description	Unit of use qty
*5510–220–6078	Lumber, Soft Wood (MM–L–751), 1″ x 4″	5 bf.
*5510–220–6214	Lumber, Soft Wood (MM–L–751), 3″ x 4″	5¼″ bf.
*5530–554–8709	Plywood, Soft Wood (NN–P–530), ¾″ x 48″ x 96″ Sheet	39 sf.
6850–285–8012	Solvent, Dry Cleaning (P–D–680), 55 Gallon Drum	1 pt.
6850–753–4806	Cleaning Compound Solvent (MIL–C–372) 55 Gallon Drum	1 pt.
7510–161–0811	Ink, Marking, Steneil, Blaek (TT–I–559) 1 Gallon Can	(**)
7920–205–3570	Rag, Wiping (DDD–R–30), 50 Pound Bale	(**)
8135–132–9067	Fiberboard, Corrugated (PPP–F–320), 48″ x 96″ Sheet	4⅛ sf.
*8135–239–5293	Seal, Strapping, Closed Type W/O Ears, ¾″, 1.7812 x 0.8075 Wide, 5,000 per Box	3 ea.
8135–282–0565	Barrier Material, Water Vaporproofed, Flexible (MIL–B–131), 36″ x 200 Yard Roll	¼ yd.
*8135–282–0565	Barrier Material, Water Vaporproofed, Flexible (MIL–B–131), 36″ x 200 Yard Roll	⅓ yd.
*8135–283–0669	Strapping, Steel, Nailless (QQ–S–781), ¾″ x 0.023″, 100 Pound Coil	31 ft.
8135–855–6969	Cushioning Material, Cellulosie (PPP–C–843), ¾″ x 24″ x 167 Foot Paekage	½ ft.
8135–890–9873	Pressure Sensitive Tape (PPP–T–60) 2″ x 60 Yard Roll	⅓ yd.
8135–985–7242	Paper, Volatile, Paekaging (MIL–P–3420) 36″ x 100 Foot Roll	1½ ft.
9150–281–2007	Corrosion, Preventative Compound, Lubrieating Oil, General Purpose, (VV–L–800), 55 Gallon Drum	1 pt.
9310–160–7858	Board, Steneil, UU–S–625 100 sh	(**)

*Material requirements for 54 pistols.
**These items will be required in addition to the packaging materials listed above and will be used as needed.

Bill of Materials

Name	No. Req'd	Material	Dimensions	FSN
End	2	Plywood	30¼″ x 25¾″ x ¾″	5530–554–8709
Side	2	Plywood	34¾″ x 25¾″ x ¾″	5530–554–8709
Top	1	Plywood	34¾″ x 31¾″ x ¾″	5530–554–8709
Bottom	1	Plywood	34¾″ x 31¾″ x ¾″	5530–554–8709
Vertieal Cleat	4	Wood	1″ x 4″ x 25⅝″	5510–220–6078
Horizontal Cleat	4	Wood	1″ x 4″ x 18⅜″	5510–220–6078
Skid	2	Wood	3″ x 4″ x 31¾″	5510–220–6214

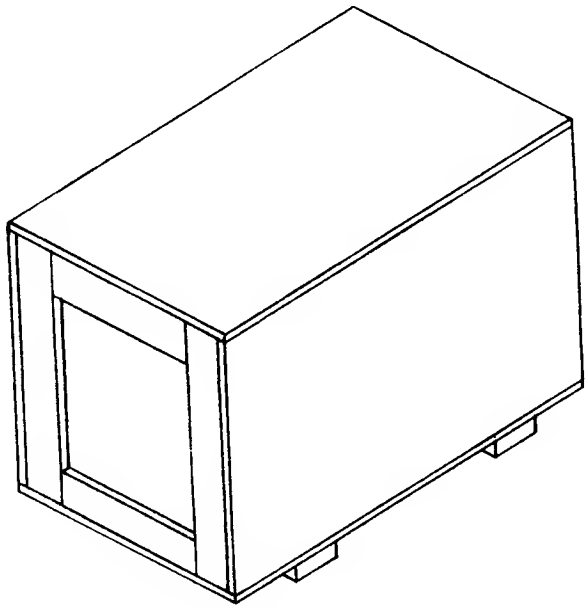

Figure A–45. Shipping container

APPENDIX A–46

PREPARATION INSTRUCTIONS FOR SHIPMENT: SURFACE VESSEL TRANSPORT

FSN	ITEM DESCRIPTION
☐ 1095–897–8755	Rack Storage, Small Arms.

PRESERVED: _____ (Month) _____ (Day) _____ (Year)

PRESERVED FOR A MAXIMUM OF 180 DAYS

NOTE:

Function: Relates to instructions to be accomplished in preparation of the equipment for shipment.

Mech: For initials of mechanic or responsible processing personnel to indicate function has been completed.

Insp: For initials of inspector certifying that function has been completed as indicated by the mechanic or processing personnel.

Step	Function	Mech	Insp
	a. Unit Responsibility.		
1	Assure that arms racks are in good operating condition.		
2	Deliver complete arms rack to designated processing site.		
3	Unit Commander, or representative will remain with arms rack until acceptance by responsible preservation site personnel.		
	b. Cleaning, Preservation, Packaging, Packing, and Marking.		
1	Clean grease and any other foreign substance from surfaces of arms rack with rags (DDD–R–30) (7920–205–3570) saturated with solvent, dry cleaning (P–D–680) (6850–285–8012).		
2	Locking bar shall be located in the lower position of the rack assembly, placed in the 45° locking position.		
3	Secure locking bar with wire, 8″ long (2 pieces required) (QQ–W–461) (9505–782–5566) placed thru the locking bar hole and the hole provided in the rack.		
4	Apply the following information on a tag (UU–T–81) (8135–178–9193): 1095–897–8755 Rack, Storage, Small Arms 1 Each Preserved on (month-day-year) for a maximum of 180 days Gross Weight: 76. Cube: 19.38		
5	Assemble a pallet, 48″ x 69″ (for Bill of Materials, see fig. A–46) with 8D nails (FF–N–105) (5315–010–6507).		
6	Pack 4 arms racks flat on pallet.		
7	Place a 48″ x 69″ x ½″ plywood board on top of the 4 racks (NN–P–530) (5530–618–6958).		
8	Apply 4 steel strapping bands (QQ–S–781) (8135–283–0669) two lengthwise, size ¾″ x 240″ (2 required) and two girthwise, size ¾″ x 192″ (2 required).		
9	Secure strapping with seals, ¾″ (8135–239–5293) (4 required).		
10	Apply the following marking, in minimum 1″ letters on plywood top, with stencil ink (TT–I–559) (7510–161–0811): 1095–897–8755 Rack, Storage, Small Arms 4 Each Preserved on (month-day-year) for a maximum of 180 days Gross Weight: 380. Cube: 90		

Step	Function	Mech	Insp
11	Preparation instructions sheets shall be completed and placed in a waterproof envelope (MIL-B-131) (8135-282-0565) size 10″ x 12″ and secured to the item/container in a conspicuous location.		
	c. Deprocessing. Prior to placing this item in service, following receipt, deprocessing action will be in reverse of checklist above.		

Table A-46. Packaging Materials List

FSN	Item description	Unit of use qty
*5315-010-6507	Nail, General Purpose (FF-N-105), 8D, 2⅜″ Lg., 50 Pound Carton	1 lb.
*5510-220-6078	Lumber, Soft Wood (MM-L-751), 1″ x 4″	7¼ bf.
*5510-220-6194	Lumber, Soft Wood (MM-L-751), 2″ x 4″	6 bf.
*5530-618-6958	Plywood, Soft Wood (NN-P-530), ½″ x 48″ x 96″ Sheet	46 sf.
6850-285-8012	Solvent, Dry Cleaning (P-D-680), 55 Gallon Drum	1 qt.
7510-161-0811	Ink, Marking, Stencil, Black (TT-I-559), 1 Gallon Can	⅛ oz.
7920-205-3570	Rag, Wiping (DDD-R-30), 50 Pound Bale	1 lb.
8135-178-9193	Tag, Blank, Cloth White (UU-T-81), 6¼″ x 3⅛″, 100 per Package	4 ea.
*8135-239-5293	Seal, Strapping, Closed Type, W/O Ears, ¾″ 1.7812 x 0.8075 Wide, 5,000 per Box	4 ea.
*8135-282-0565	Barrier Material, Water-vaporproof, Flexible (MIL-B-131), 36″ x 200 Yard Roll	⅓ yd.
*8135-283-0669	Strapping, Steel, Nailless, ¾″ x 0.023″ (QQ-S-781), 100 Pound Coil	72 ft.
9505-782-5566	Wire Steel, RD Zinc-Coated (QQ-W-461), 50 Pound Coil	⅓ yd.
9310-160-7858	Board, Stencil (UU-S-625) 100 sh	(**)

*Material requirements are for 4 gun racks.
**These items will be required in addition to the packaging materials listed above and will be used as needed.

Bill of Materials

Name	No. req'd	Material	Dimensions	FSN
Stringers	3	Wood	2″ x 4″ x 48″	5510-220-6194
Deck Board	1	Plywood	48″ x 69″ x ½″	5530-618-6958
Frame Members	3	Wood	1″ x 4″ x 69″	5510-220-6078
Top	1	Plywood	48″ x 69″ x ½″	5530-618-6958

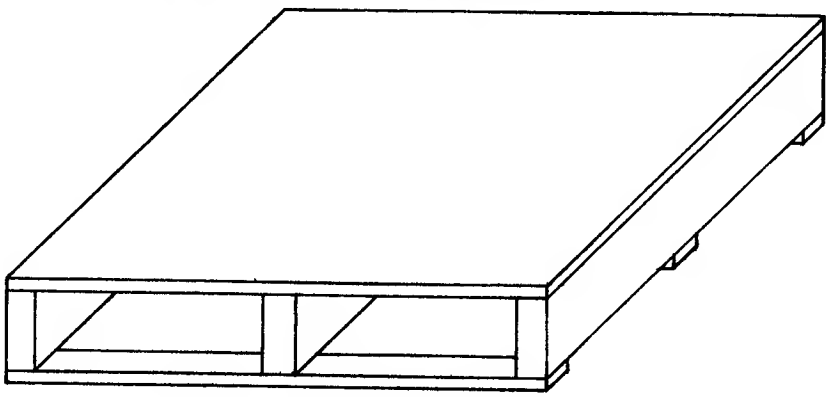

Figure A-46. Shipping Pallet.

By Order of the Secretary of the Army:

W. C. WESTMORELAND,
General, United States Army,
Chief of Staff.

Official:
KENNETH G. WICKHAM,
Major General, United States Army,
The Adjutant General.

Distribution:
Active Army:
To be distributed in accordance with DA Form 12–34 (qty rqr block No. 28) requirements for TB 750–951-series.
ARNG: None.
USAR: None.

☆U.S. GOVERNMENT PRINTING OFFICE: 1969 O—352—087